Pioneer sound.vision.soul

Service Manual

ORDER NO.
CRT3692

HIGH POWER CD/MP3/WMA/AAC PLAYER WITH BLUETOOTH WIRELESS TECHNOLOGY, FM/AM TUNER AND MULTI-CD CONTROL

DEH-P8880BT /X1F/BR

This service manual should be used together with the following manual(s) listed below. For the parts numbers, adjustments, etc. which are not shown in this manual, refer to the following manual(s).

Model No.	Order No.	Mech. Module	Remarks
DEH-P75BT/XN/EW5	CRT3627		
CX-3164	CRT3583	S10.5COMP1	CD Mech. Module : Circuit Description, Mech. Description, Disassembly

PIONEER CORPORATION 4-1, Meguro 1-chome, Meguro-ku, Tokyo 153-8654, Japan
PIONEER ELECTRONICS (USA) INC. P.O. Box 1760, Long Beach, CA 90801-1760, U.S.A.
PIONEER EUROPE NV Haven 1087, Keetberglaan 1, 9120 Melsele, Belgium
PIONEER ELECTRONICS ASIACENTRE PTE. LTD. 253 Alexandra Road, #04-01, Singapore 159936
ⓒ**PIONEER CORPORATION 2006**
K-ZZD. MAY 2006 Printed in Japan

EXPLODED VIEWS AND PARTS LIST

*NOTES : • Parts marked by " * " are generally unavailable because they are not in our Master Spare Parts List.*
• The ⚠ mark found on some component parts indicates the importance of the safety factor of the part. Therefore, when replacing, be sure to use parts of identical designation.
• Screw adjacent to▽ mark on the product are used for disassembly.
• For the applying amount of lubricants or glue, follow the instructions in this manual. (In the case of no amount instructions,apply as you think it appropriate.)

PACKING

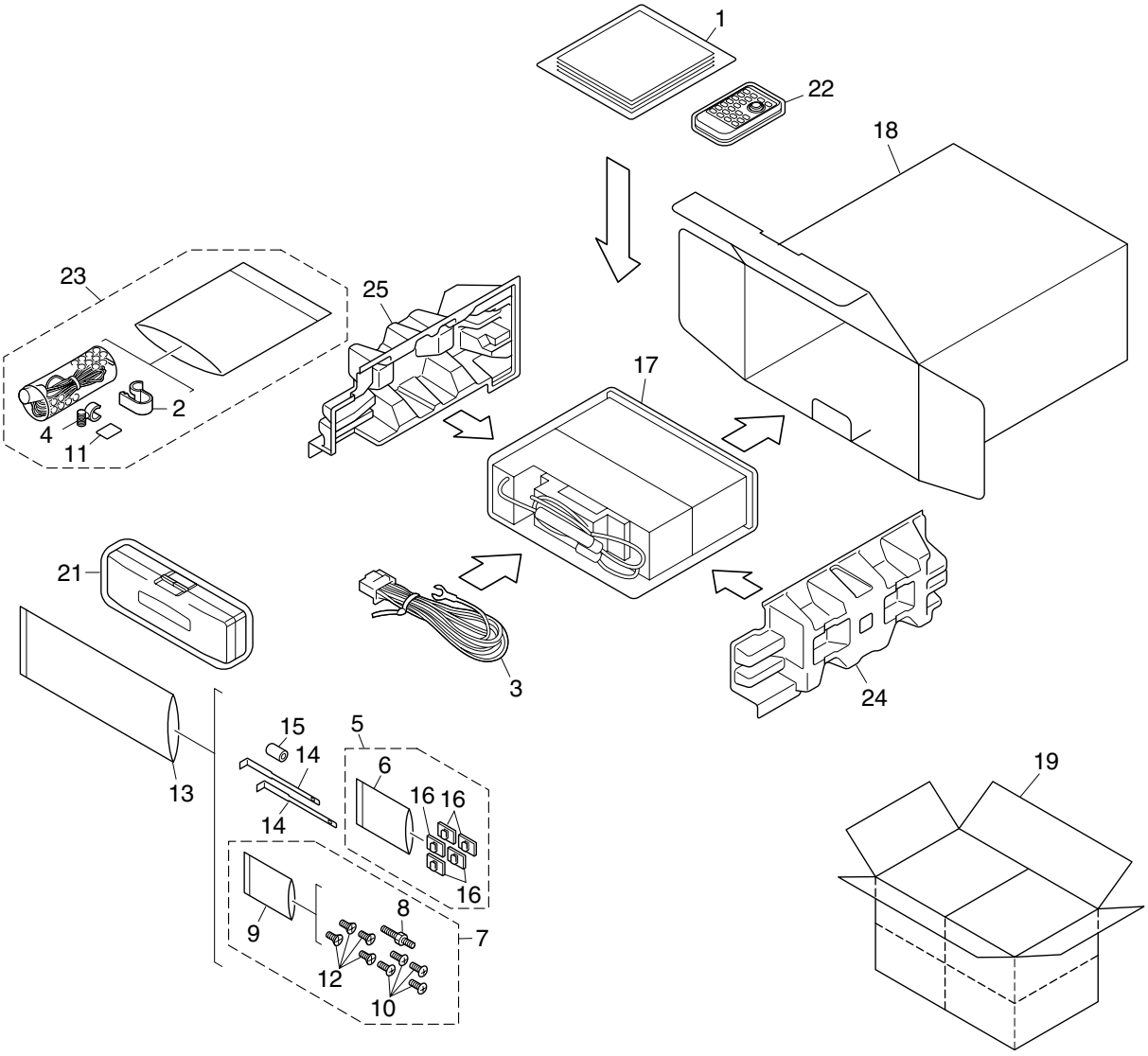

PACKING SECTION PARTS LIST

Mark	No.	Description	Part No.
*	1-1	Polyethylene Bag	CEG1116
	1-2	Owner's Manual	CRB2137
	1-3	Installation Manual	CRB2138
*	1-4	Caution Card	CRN1084
*	1-5	Waranty Card	CRY1226
*	1-6	Service Network	CRY1227
*	1-7	Caution Card	XRP7002
	2	Clip Holder	CZN5471
	3	Cord Assy	CDE6562
	4	Microphone Holder	CZN5472
	5	Cord Clamper Assy	CEA4636
*	6	Polyethylene Bag	E36-615
	7	Screw Assy	CEA3849
	8	Screw	CBA1650
*	9	Polyethylene Bag	CEG-127
	10	Screw	CRZ50P090FTC
	11	Cushion	CZN5473
	12	Screw	TRZ50P080FTC
*	13	Polyethylene Bag	CEG-158
	14	Handle	CNC5395
	15	Bush	CNV3930
*	16	Clamper	CNN8262
	17	Polyethylene Bag	CEG-162
	18	Carton	CHG5929
	19	Contain Box	CHL5762
	20	•••••	
	21	Case Assy	XXA7417
	22	Remote Control Unit	CXC5715
	23	Microphone Assy	CPM1064
	24	Protector	XHP7008
	25	Protector	XHP7007

Owner's Manual, Installation Manual

Part No.	Language
CRB2137, CRB2138	Portuguese(B)

EXTERIOR(1)(DEH-P7850BT/XN/ES)(Page 12)

EXTERIOR(1)(DEH-P7850BT/XN/ES) SECTION PARTS LIST

Mark	No.	Description	DEH-P7850BT/XN/ES	DEH-P8880BT/X1F/BR
	1	Cord Assy	CDE7701	CDE6562
	3	Cap	Not used	CKX-003
	8	Detach Grille Assy	CXC5554	CXC6840
	22	Sub Grille Assy	CXC5875	CXC6839
	25	Button Unit (SRC)	CXC5879	CXC5880

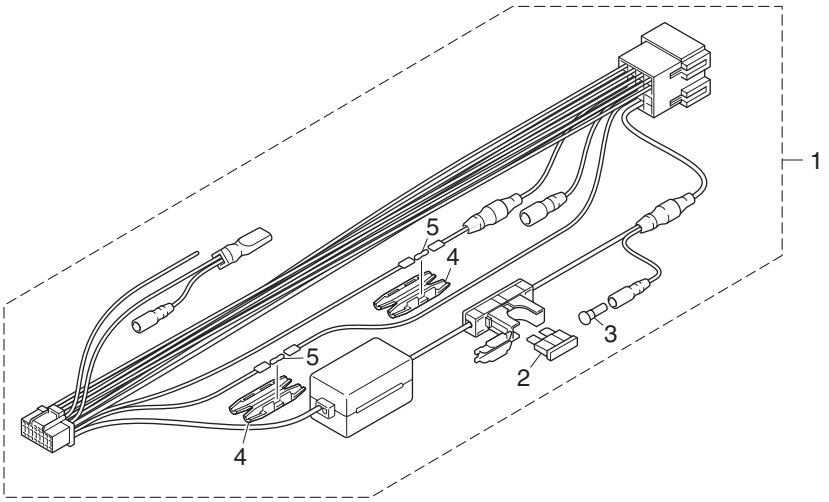

EXTERIOR(2)(Page 14)

EXTERIOR(2) SECTION PARTS LIST

Mark	No.	Description	DEH-P7850BT/XN/ES	DEH-P8880BT/X1F/BR
	12	Tuner Amp Unit	CWN1426	CWN1427
	27	Connector(CN151)	Not used	CKS4124
	34	Holder	CND3131	CND3130
	85	CD Mechanism Module (S10.5)	CXK5752	CXK5750

ELECTRICAL PARTS LIST(Page 54)

TUNER AMP UNIT

Circuit Symbol and No.	Part Name	DEH-P7850BT/XN/ES	DEH-P8880BT/X1F/BR
D151	Diode	Not used	DAN202U
D152	Diode	Not used	DAP202U
R151		Not used	RS1/16S102J
R152		Not used	RS1/16S102J

Page 24 Address 2C

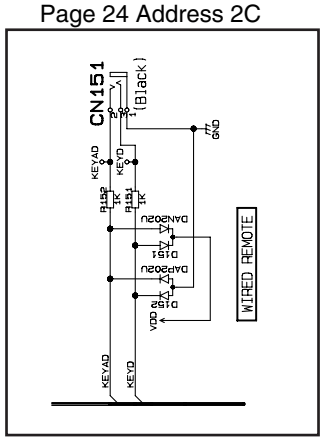

Pioneer *sound.vision.soul*

Service Manual

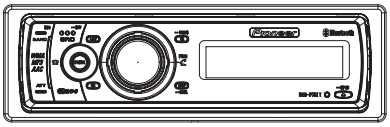

DEH-P75BT/XN/EW5

ORDER NO.
CRT3627

HIGH POWER CD/MP3/WMA/AAC PLAYER WITH BLUETOOTH WIRELESS TECHNOLOGY, RDS TUNER AND MULTI-CD CONTROL

DEH-P75BT /XN/EW5

HIGH POWER CD/MP3/WMA/AAC PLAYER WITH BLUETOOTH WIRELESS TECHNOLOGY, FM/AM TUNER AND MULTI-CD CONTROL

DEH-P7850BT /XN/ES

This service manual should be used together with the following manual(s):

Model No.	Order No.	Mech.Module	Remarks
CX-3164	CRT3583	S10.5COMP1	CD Mech. Module : Circuit Descriptions, Mech. Descriptions, Disassembly

For details, refer to "Important Check Points for Good Servicing".

PIONEER CORPORATION 4-1, Meguro 1-chome, Meguro-ku, Tokyo 153-8654, Japan
PIONEER ELECTRONICS (USA) INC. P.O. Box 1760, Long Beach, CA 90801-1760, U.S.A.
PIONEER EUROPE NV Haven 1087, Keetberglaan 1, 9120 Melsele, Belgium
PIONEER ELECTRONICS ASIACENTRE PTE. LTD. 253 Alexandra Road, #04-01, Singapore 159936
ⓒ**PIONEER CORPORATION 2006**

K-ZZD.APR. 2006 Printed in Japan

SAFETY INFORMATION

This service manual is intended for qualified service technicians; it is not meant for the casual do-it-yourselfer. Qualified technicians have the necessary test equipment and tools, and have been trained to properly and safely repair complex products such as those covered by this manual.
Improperly performed repairs can adversely affect the safety and reliability of the product and may void the warranty. If you are not qualified to perform the repair of this product properly and safely, you should not risk trying to do so and refer the repair to a qualified service technician.

● **Safety Precautions for those who Service this Unit.**

- **When checking or adjusting the emitting power of the laser diode exercise caution in order to get safe, reliable results.**

Caution:

1. **During repair or tests, minimum distance of 13 cm from the focus lens must be kept.**
2. **During repair or tests, do not view laser beam for 10 seconds or longer.**

CAUTION:
USE OF CONTROLS OR ADJUSTMENTS OR PERFORMANCE OF PROCEDURES OTHER THAN THOSE SPECIFIED HEREIN MAY RESULT IN HAZARDOUS RADIATION EXPOSURE.

CAUTION
This product contains a laser diode of higher class than 1. To ensure continued safety, do not remove any covers or attempt to gain access to the inside of the product.
Refer all servicing to qualified personnel.

The following caution label appears on your unit.

Location: on the bottom of the unit

WARNING!

The AEL (accessible emission level)of the laser power output is less than CLASS 1 but the laser component is capable of emitting radiation exceeding the limit for CLASS 1.
A specially instructed person should do servicing operation of the apparatus.

Laser diode characteristics
Wave length : 785 to 814 nm
Maximum output : 1 190 μW(Emitting period : unlimited)

Additional Laser Caution

Transistors Q101 in PCB drive the laser diodes.
When Q101 is shorted between their terminals, the laser diodes will radiate beam.
If the top cover is removed with no disc loaded while such short-circuit is continued, the naked eyes may be exposed to the laser beam.

CAUTION

Danger of explosion if battery is incorrectly replaced.
Replaced only with the same or equivalent type recommended by the manufacture.
Discord used batteries according to the manufacture's instructions.

● Service Precaution

1. You should conform to the regulations governing the product (safety, radio and noise, and other regulations), and should keep the safety during servicing by following the safety instructions described in this manual.
2. Before disassembling the unit, be sure to turn off the power. Unplugging and plugging the connectors during power-on mode may damage the ICs inside the unit.
3. To protect the pickup unit from electrostatic discharge during servicing, take an appropriate treatment (shorting-solder) by referring to "the DISASSEMBLY".
4. After replacing the pickup unit, be sure to check the grating.
5. Be careful in handling ICs. Some ICs such as MOS type are so fragile that they can be damaged by electrostatic induction.

[Important Check Points for Good Servicing]

In this manual, procedures that must be performed during repairs are marked with the below symbol.
Please be sure to confirm and follow these procedures.

1. Product safety

Please conform to product regulations (such as safety and radiation regulations), and maintain a safe servicing environment by following the safety instructions described in this manual.

① Use specified parts for repair.

Use genuine parts. Be sure to use important parts for safety.

② Do not perform modifications without proper instructions.

Please follow the specified safety methods when modification(addition/change of parts) is required due to interferences such as radio/TV interference and foreign noise.

③ Make sure the soldering of repaired locations is properly performed.

When you solder while repairing, please be sure that there are no cold solder and other debris.
Soldering should be finished with the proper quantity. (Refer to the example)

④ Make sure the screws are tightly fastened.

Please be sure that all screws are fastened, and that there are no loose screws.

⑤ Make sure each connectors are correctly inserted.

Please be sure that all connectors are inserted, and that there are no imperfect insertion.

⑥ Make sure the wiring cables are set to their original state.

Please replace the wiring and cables to the original state after repairs.
In addition, be sure that there are no pinched wires, etc.

⑦ Make sure screws and soldering scraps do not remain inside the product.

Please check that neither solder debris nor screws remain inside the product.

⑧ There should be no semi-broken wires, scratches, melting, etc. on the coating of the power cord.

Damaged power cords may lead to fire accidents, so please be sure that there are no damages.
If you find a damaged power cord, please exchange it with a suitable one.

⑨ There should be no spark traces or similar marks on the power plug.

When spark traces or similar marks are found on the power supply plug, please check the connection and advise on secure connections and suitable usage. Please exchange the power cord if necessary.

⑩ Safe environment should be secured during servicing.

When you perform repairs, please pay attention to static electricity, furniture, household articles, etc. in order to prevent injuries.
Please pay attention to your surroundings and repair safely.

2. Adjustments

To keep the original performance of the products, optimum adjustments and confirmation of characteristics within specification.
Adjustments should be performed in accordance with the procedures/instructions described in this manual.

3. Lubricants, Glues, and Replacement parts

Use grease and adhesives that are equal to the specified substance.
Make sure the proper amount is applied.

4. Cleaning

For parts that require cleaning, such as optical pickups, tape deck heads, lenses and mirrors used in projection monitors, proper cleaning should be performed to restore their performances.

5. Shipping mode and Shipping screws

To protect products from damages or failures during transit, the shipping mode should be set or the shipping screws should be installed before shipment. Please be sure to follow this method especially if it is specified in this manual.

CONTENTS

SAFETY INFORMATION....2
1. SPECIFICATIONS....6
2. EXPLODED VIEWS AND PARTS LIST....8
2.1 PACKING....8
2.2 EXTERIOR(1)(DEH-P75BT/XN/EW5)....10
2.3 EXTERIOR(1)(DEH-P7850BT/XN/ES)....12
2.4 EXTERIOR(2)....14
2.5 CD MECHANISM MODULE(S10.5)....16
3. BLOCK DIAGRAM AND SCHEMATIC DIAGRAM....18
3.1 BLOCK DIAGRAM....18
3.2 OVERALL CONNECTION DIAGRAM(GUIDE PAGE)....22
3.3 KEYBOARD UNIT....28
3.4 CD MECHANISM MODULE(S10.5)(GUIDE PAGE)....30
3.5 BLUETOOTH UNIT, ANTENNA UNIT....40
4. PCB CONNECTION DIAGRAM....42
4.1 TUNER AMP UNIT....42
4.2 KEYBOARD UNIT....46
4.3 CD CORE UNIT(S10.5COMP1)....48
4.4 BLUETOOTH UNIT....50
4.5 ANTENNA UNIT....52
4.6 SWITCH UNIT....53
5. ELECTRICAL PARTS LIST....54
6. ADJUSTMENT....66
6.1 DISPLAY TEST MODE....66
6.2 CD ADJUSTMENT....67
6.3 CHECKING THE GRATING AFTER CHANGING THE PICKUP UNIT....69
6.4 ERROR MODE....71
6.5 BLUETOOTH TEST MODE....72
6.6 SYSTEM MICROCOMPUTER TEST PROGRAM....77
7. GENERAL INFORMATION....78
7.1 DIAGNOSIS....78
7.1.1 DISASSEMBLY....78
7.1.2 CONNECTOR FUNCTION DESCRIPTION....83
7.2 IC....84
7.3 OPERATIONAL FLOW CHART....99
8. OPERATIONS....100

1. SPECIFICATIONS

● DEH-P75BT/XN/EW5

General

Power source ..... 14.4 V DC (12.0 V to 14.4 V allowable)
Grounding system ..... Negative type
Max. current consumption ..... 10.0 A
Backup current ..... 6 mA or less
Dimensions (W × H × D):
DIN
Chassis ..... 178 × 50 × 161 mm
Nose ..... 188 × 58 × 28 mm
D
Chassis ..... 178 × 50 × 166 mm
Nose ..... 170 × 45 × 23 mm
Weight ..... 1.68 kg

Audio

Maximum power output ..... 50 W × 4
50 W × 2/4 Ω + 70 W × 1/2 Ω (for subwoofer)
Continuous power output ... 27 W × 4 (DIN 45324, +B=14.4 V)
Load impedance ..... 4 Ω to 8 Ω × 4
4 Ω to 8 Ω × 2 + 2 Ω × 1
Preout max output level/output impedance ..... 4 V/100 Ω
Equalizer (7-Band Graphic Equalizer):
Frequency ..... 50/125/315/800/2k/5k/12.5k Hz
Gain ..... ±12 dB
Loudness contour:
Low ..... +3.5 dB (100 Hz), +3 dB (10 kHz)
Mid ..... +10 dB (100 Hz), +6.5 dB (10 kHz)
High ..... +11 dB (100 Hz), +11 dB (10 kHz)
(volume: –30 dB)
HPF:
Frequency ..... 50/63/80/100/125 Hz
Slope ..... –12 dB/oct
Subwoofer (mono):
Frequency ..... 50/63/80/100/125 Hz
Slope ..... –18 dB/oct
Gain ..... +6 dB to –24 dB
Phase ..... Normal/Reverse
Bass boost:
Gain ..... +12 dB to 0 dB

CD player

System ..... Compact disc audio system
Usable discs ..... Compact disc
Signal format:
Sampling frequency ..... 44.1 kHz
Number of quantization bits ..... 16; linear
Frequency characteristics ... 5 Hz to 20 000 Hz (±1 dB)
Signal-to-noise ratio ..... 94 dB (1 kHz) (IEC-A network)
Dynamic range ..... 92 dB (1 kHz)
Number of channels ..... 2 (stereo)
MP3 decoding format ..... MPEG-1 & 2 Audio Layer 3
WMA decoding format ..... Ver. 7, 7.1, 8, 9, 10 (2ch audio)
(Windows Media Player)
AAC decoding format ..... MPEG-4 AAC (iTunes® encoded only)
WAV signal format ..... Linear PCM & MS ADPCM

FM tuner

Frequency range ..... 87.5 MHz to 108.0 MHz
Usable sensitivity ..... 8 dBf (0.7 μV/75 Ω, mono, S/N: 30 dB)
50 dB quieting sensitivity ..... 10 dBf (0.9 μV/75 Ω, mono)
Signal-to-noise ratio ..... 75 dB (IEC-A network)
Distortion ..... 0.3 % (at 65 dBf, 1 kHz, stereo)
0.1 % (at 65 dBf, 1 kHz, mono)
Frequency response ..... 30 Hz to 15 000 Hz (±3 dB)
Stereo separation ..... 45 dB (at 65 dBf, 1 kHz)
Selectivity ..... 80 dB (±200 kHz)

MW tuner

Frequency range ..... 531 kHz to 1 602 kHz (9 kHz)
Usable sensitivity ..... 18 μV (S/N: 20 dB)
Signal-to-noise ratio ..... 65 dB (IEC-A network)

LW tuner

Frequency range ..... 153 kHz to 281 kHz
Usable sensitivity ..... 30 μV (S/N: 20 dB)
Signal-to-noise ratio ..... 65 dB (IEC-A network)

Bluetooth

Version ..... Bluetooth 1.2 certified
Output power ..... +4 dBm Max.
(Power class 2)

Laser diode characteristics

Wavelength ..... 785 nm to 815 nm
Maximum output ..... 1 190 um
(Emitting period: unlimited)

Note

Specifications and the design are subject to possible modifications without notice due to improvements. ■

● DEH-P7850BT/XN/ES

General

Power source ..... 14.4 V DC (12.0 V to 14.4 V allowable)
Grounding system ..... Negative type
Max. current consumption ..... 10.0 A
Backup current ..... 6 mA or less
Dimensions (W × H × D):
DIN
Chassis ..... 178 × 50 × 161 mm
Nose ..... 188 × 58 × 28 mm
D
Chassis ..... 178 × 50 × 166 mm
Nose ..... 170 × 45 × 23 mm
Weight ..... 1.68 kg

Audio

Maximum power output ..... 50 W × 4
50 W × 2/4 Ω + 70 W × 1/2 Ω (for subwoofer)
Continuous power output ... 22 W × 4 (50 Hz to 15 000 Hz, 5% THD, 4 Ω load, both channels driven)
Load impedance ..... 4 Ω to 8 Ω × 4
4 Ω to 8 Ω × 2 + 2 Ω × 1
Preout max output level/output impedance ..... 4 V/100 Ω
Equalizer (7-Band Graphic Equalizer):
Frequency ..... 50/125/315/800/2k/5k/12.5k Hz
Gain ..... ±12 dB
Loudness contour:
Low ..... +3.5 dB (100 Hz), +3 dB (10 kHz)
Mid ..... +10 dB (100 Hz), +6.5 dB (10 kHz)
High ..... +11 dB (100 Hz), +11 dB (10 kHz)
(volume: –30 dB)
HPF:
Frequency ..... 50/63/80/100/125 Hz
Slope ..... –12 dB/oct
Subwoofer (mono):
Frequency ..... 50/63/80/100/125 Hz
Slope ..... –18 dB/oct
Gain ..... +6 dB to –24 dB
Phase ..... Normal/Reverse
Bass boost:
Gain ..... +12 dB to 0 dB

CD player

System ..... Compact disc audio system
Usable discs ..... Compact disc
Signal format:
Sampling frequency ..... 44.1 kHz
Number of quantization bits ..... 16; linear
Frequency characteristics ... 5 Hz to 20 000 Hz (±1 dB)
Signal-to-noise ratio ..... 94 dB (1 kHz) (IEC-A network)
Dynamic range ..... 92 dB (1 kHz)
Number of channels ..... 2 (stereo)
MP3 decoding format ..... MPEG-1 & 2 Audio Layer 3
WMA decoding format ..... Ver. 7, 7.1, 8, 9, 10 (2ch audio)
(Windows Media Player)
AAC decoding format ..... MPEG-4 AAC (iTunes® encoded only)
WAV signal format ..... Linear PCM & MS ADPCM

FM tuner

Frequency range ..... 87.5 MHz to 108.0 MHz
Usable sensitivity ..... 8 dBf (0.7 μV/75 Ω, mono, S/N: 30 dB)
50 dB quieting sensitivity ..... 10 dBf (0.9 μV/75 Ω, mono)
Signal-to-noise ratio ..... 75 dB (IEC-A network)
Distortion ..... 0.3 % (at 65 dBf, 1 kHz, stereo)
0.1 % (at 65 dBf, 1 kHz, mono)
Frequency response ..... 30 Hz to 15 000 Hz (±3 dB)
Stereo separation ..... 45 dB (at 65 dBf, 1 kHz)

AM tuner

Frequency range ..... 531 kHz to 1 602 kHz (9 kHz)
530 kHz to 1 640 kHz (10 kHz)
Usable sensitivity ..... 18 μV (S/N: 20 dB)
Signal-to-noise ratio ..... 65 dB (IEC-A network)

Bluetooth

Version ..... Bluetooth 1.2 certified
Output power ..... +4 dBm Max. (Power class 2)
GAP (Generic Access Profile)
SDP (Service Discovery Protocol)
HSP (Head Set Profile)
HFP (Hands Free Profile)
A2DP (Advanced Audio Distribution Profile)
AVRCP (Audio/Video Remote Control Profile)
OPP (Object Push Profile)

Infrared remote control

Wavelength ..... 940 nm ±50 nm
Output ..... typ; 12 mw/sr per Infrared LED

Note

Specifications and the design are subject to possible modifications without notice due to improvements. ■

2. EXPLODED VIEWS AND PARTS LIST

*NOTES : • Parts marked by " * " are generally unavailable because they are not in our Master Spare Parts List.*
• The ⚠ mark found on some component parts indicates the importance of the safety factor of the part. Therefore, when replacing, be sure to use parts of identical designation.
• Screw adjacent to▽mark on the product are used for disassembly.
• For the applying amount of lubricants or glue, follow the instructions in this manual. (In the case of no amount instructions,apply as you think it appropriate.)

2.1 PACKING

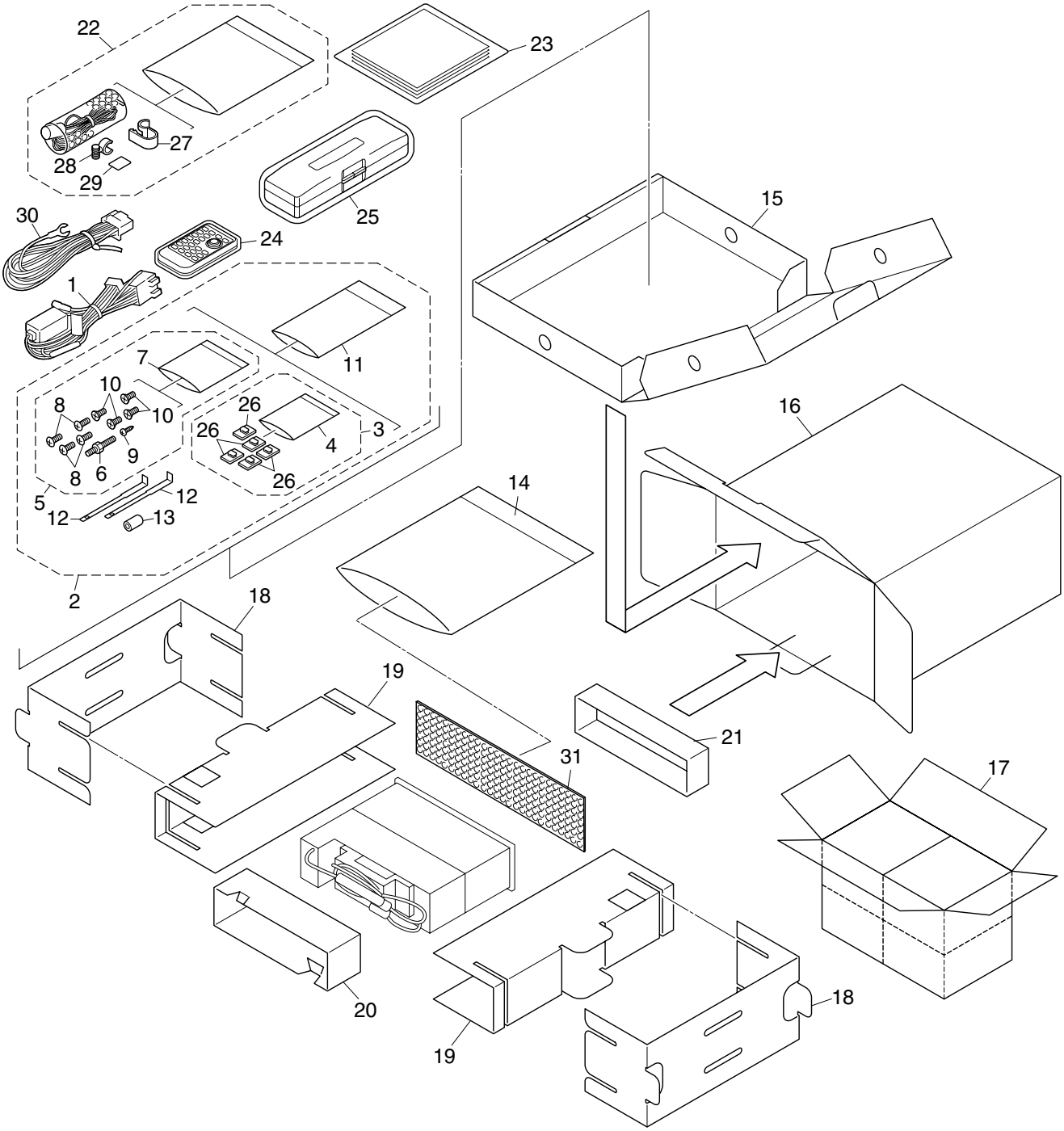

(1) PACKING SECTION PARTS LIST

Mark	No.	Description	Part No.
	1	Cord Assy	See Contrast table(2)
	2	Accessory Assy	See Contrast table(2)
	3	Cord Clamper Assy	CEA4636
*	4	Polyethylene Bag	E36-615
	5	Screw Assy	See Contrast table(2)
	6	Screw	CBA1650
*	7	Polyethylene Bag	CEG-127
	8	Screw	CRZ50P090FTC
	9	Screw	See Contrast table(2)
	10	Screw	TRZ50P080FTC
*	11	Polyethylene Bag	CEG-158
	12	Handle	CNC5395
	13	Bush	CNV3930
	14	Polyethylene Bag	CEG-162
	15	Sub Carton	CHG5195
	16	Carton	See Contrast table(2)
	17	Contain Box	See Contrast table(2)
	18	Protector	CHP2797
	19	Protector	CHP2798
	20	Protector	CHP2812
	21	Protector	CHP3184
	22	Microphone Assy	CPM1064
	23-1	Owner's Manual	See Contrast table(2)
	23-2	Owner's Manual	See Contrast table(2)
	23-3	Owner's Manual	See Contrast table(2)
	23-4	Owner's Manual	See Contrast table(2)
	23-5	Installation Manual	See Contrast table(2)
*	23-6	Caution Card	See Contrast table(2)
*	23-7	Passport	See Contrast table(2)
*	23-8	Warranty Card	See Contrast table(2)
*	23-9	Polyethylene Bag	E36-634
	23-10	Caution Card	See Contrast table(2)
	24	Remote Control Unit	CXC5715
	25	Case Assy	XXA7417
*	26	Clamper	CNV8262
	27	Clip Holder	CZN5471
	28	Microphone Holder	CZN5472
	29	Cushion	CZN5473
	30	Cord Assy	See Contrast table(2)
	31	Air Cap	CEG1372

(2) CONTRAST TABLE

DEH-P75BT/XN/EW5 and DEH-P7850BT/XN/ES are constructed the same except for the following:

Mark	No.	Description	DEH-P75BT/XN/EW5	DEH-P7850BT/XN/ES
	1	Cord Assy	CDE6562	Not used
	2	Accessory Assy	CEA5919	* CEA5920
	5	Screw Assy	CEA5322	CEA3849
	9	Screw	JPZ20P060FTB	Not used
	16	Carton	CHG5880	CHG5761
	17	Contain Box	CHL5880	CHL5761
	23-1	Owner's Manual	CRD4053	CRD4060
	23-2	Owner's Manual	CRD4056	CRD4061
	23-3	Owner's Manual	CRD4057	Not used
	23-4	Owner's Manual	CRB2135	CRB2136
	23-5	Installation Manual	CRD4058	CRD4059
*	23-6	Caution Card	CRP1335	XRP7002
*	23-7	Passport	CRY1013	Not used
*	23-8	Warranty Card	CRY1157	Not used
	23-10	Caution Card	Not used	CRP1310
	30	Cord Assy	Not used	CDE7701

Owner's Manual,Installation Manual

Part No.	Language
CRD4053	English, Spanish
CRD4056	German, French
CRD4057	Italian, Dutch
CRB2135	Russian
CRD4058	English, Spanish, German, French, Italian, Dutch, Russian
CRD4060	English, Spanish
CRD4061	Portuguese(B), Traditional Chinese,
CRB2136	Arabic
CRD4059	English, Spanish, Portuguese(B), Traditional Chinese, Arabic

2.2 EXTERIOR(1)(DEH-P75BT/XN/EW5)

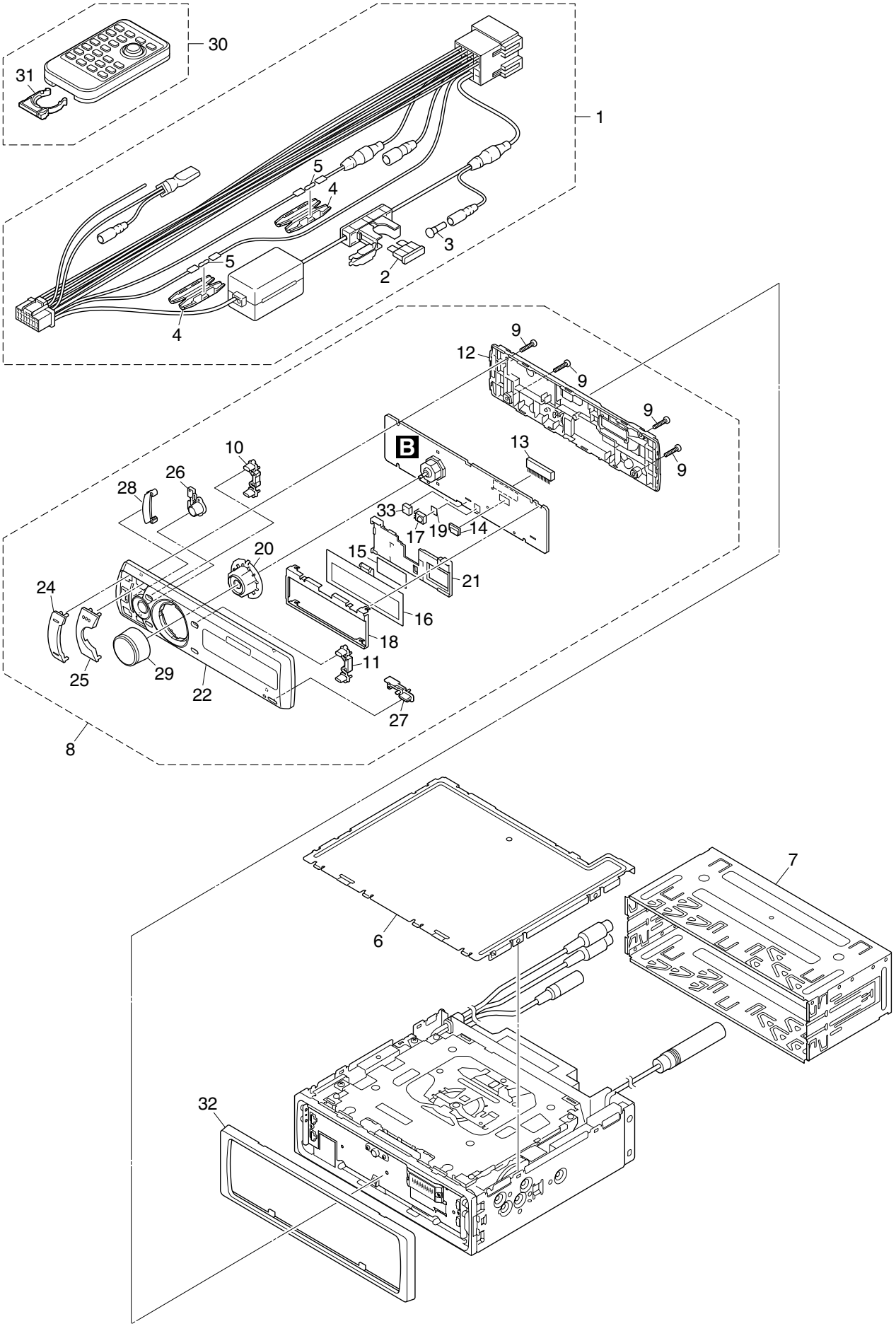

EXTERIOR(1)(DEH-P75BT/XN/EW5) SECTION PARTS LIST

Mark	No.	Description	Part No.
	1	Cord Assy	CDE6562
⚠	2	Fuse(10 A)	CEK1136
	3	Cap	CKX-003
	4	Cap	CNS1472
	5	Resistor	RS1/2PMF102J
	6	Case	CNB3330
	7	Holder	CNC8659
	8	Detach Grille Assy	CXC5553
	9	Screw	BPZ20P080FTB
	10	Button (LIST,EQ)	CAC9571
	11	Button (TA, DISP)	CAC9572
	12	Cover	CNS8491
	13	Connector(CN1801)	CKS5662
	14	Connector(CN1961)	CKS5545
	15	Double Sided Tape	CNM8673
	16	OEL Unit	MXS8231
	17	IC (IC1931)	GP1UX31RK
	18	Holder	XNC7009
	19	Double Sided Tape	XNM7118
	20	Holder	XNV7023
	21	Holder	XNV7029
	22	Sub Grille Assy	CXC5874
	23	•••••	
	24	Button Unit (BAND, ATT)	CXC5877
	25	Button Unit (SRC)	CXC5878
	26	Button Unit (PHONE)	CXC5881
	27	Button (EJECT)	XAC7130
	28	Lighting Conductor	XNV7027
	29	Knob Unit(MULTI-CONTROL)	XXA7381
	30	Remote Control Unit	CXC5715
	31	Cover	CZN5357
	32	Panel	CNS8492
	33	Cushion	CNN1497

2.3 EXTERIOR(1)(DEH-P7850BT/XN/ES)

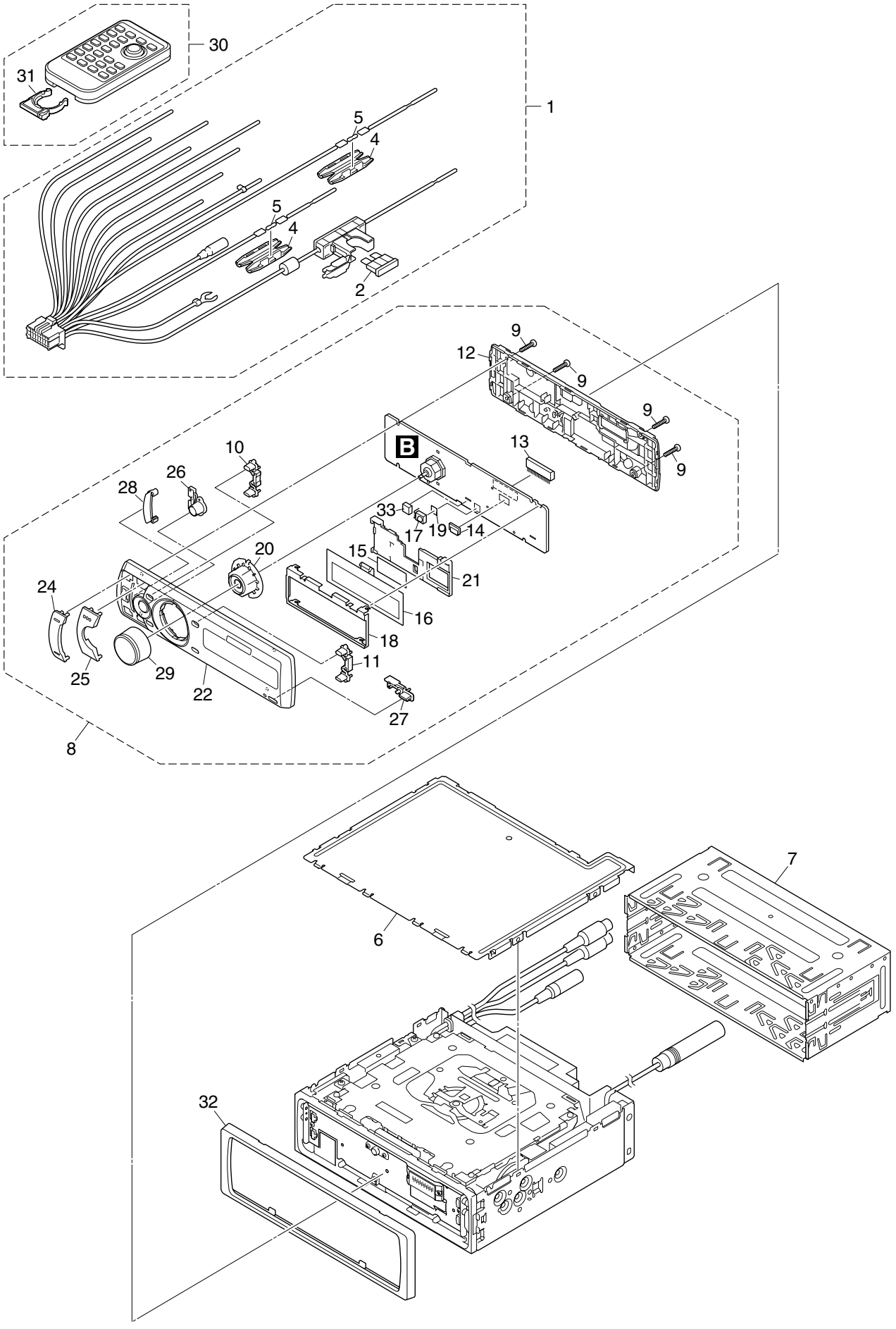

EXTERIOR(1)(DEH-P7850BT/XN/ES) SECTION PARTS LIST

Mark	No.	Description	Part No.
	1	Cord Assy	CDE7701
⚠	2	Fuse(10 A)	CEK1136
	3	•••••	
	4	Cap	CNS1472
	5	Resistor	RS1/2PMF102J
	6	Case	CNB3330
	7	Holder	CNC8659
	8	Detach Grille Assy	CXC5554
	9	Screw	BPZ20P080FTB
	10	Button (CLOCK,EQ)	CAC9571
	11	Button (CLOCK, DISP)	CAC9573
	12	Cover	CNS8491
	13	Connector(CN1801)	CKS5662
	14	Connector(CN1961)	CKS5545
	15	Double Sided Tape	CNM8673
	16	OEL Unit	MXS8231
	17	IC (IC1931)	GP1UX31RK
	18	Holder	XNC7009
	19	Double Sided Tape	XNM7118
	20	Holder	XNV7023
	21	Holder	XNV7029
	22	Sub Grille Assy	CXC5875
	23	•••••	
	24	Button Unit (BAND, ATT)	CXC5877
	25	Button Unit (SRC)	CXC5879
	26	Button Unit (PHONE)	CXC5881
	27	Button (EJECT)	XAC7130
	28	Lighting Conductor	XNV7027
	29	Knob Unit(MULTI-CONTROL)	XXA7381
	30	Remote Control Unit	CXC5715
	31	Cover	CZN5357
	32	Panel	XNS7144
	33	Cushion	CNN1497

2.4 EXTERIOR(2)

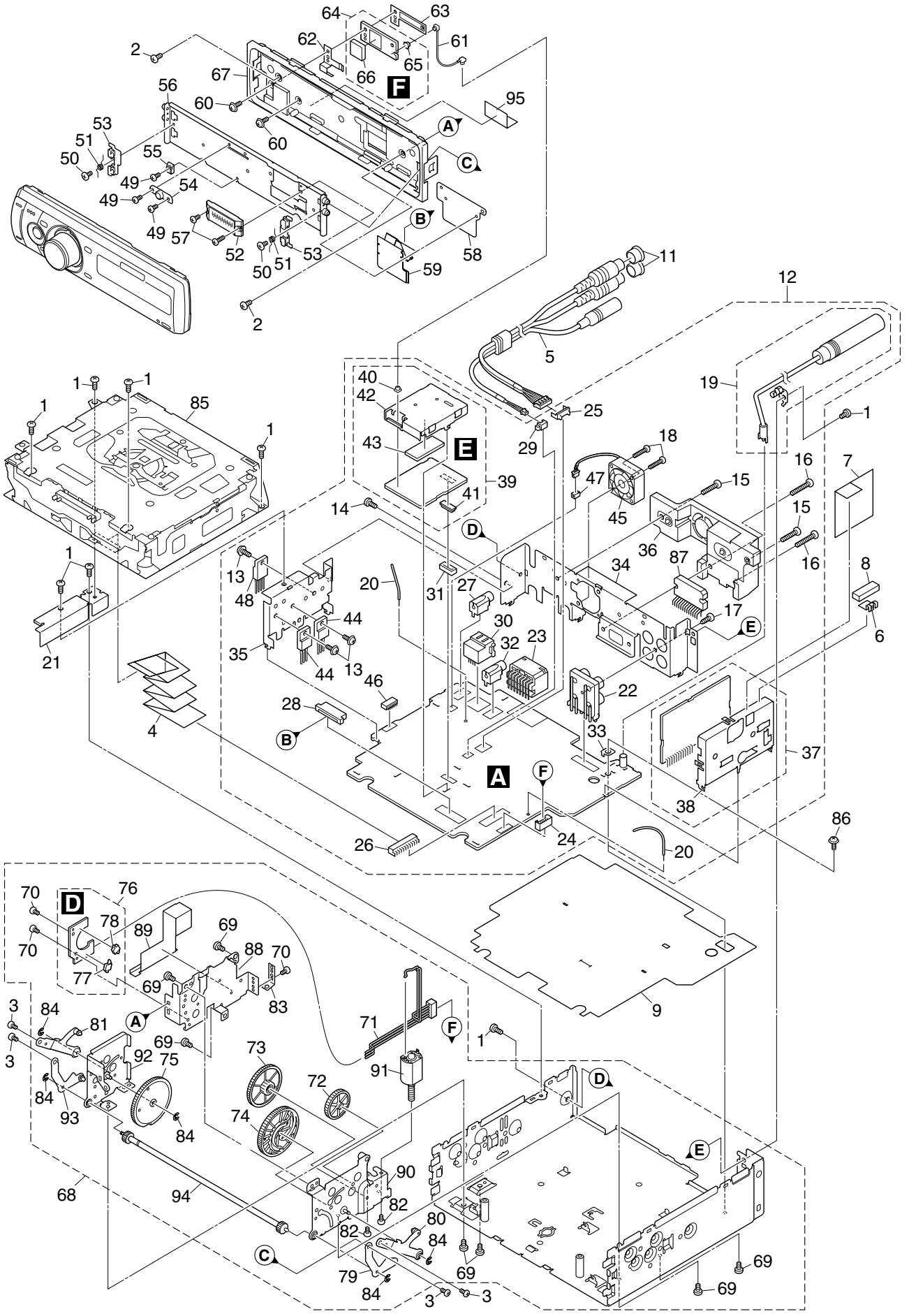

(1) EXTERIOR(2) SECTION PARTS LIST

Mark	No.	Description	Part No.
	1	Screw	BSZ26P060FTC
	2	Screw(M2.6 x 4)	CBA1828
	3	Screw(M2 x 2.5)	CBA1924
	4	Cable	CDE8065
	5	Cord Assy	See Contrast table(2)
	6	Earth Plate	CND2171
	7	Insulator	CNM8790
	8	Cushion	CNM9126
	9	Insulator	CNN1413
	10	•••••	
	11	Cap	CNV6727
	12	Tuner Amp Unit	See Contrast table(2)
	13	Screw	ASZ26P060FTC
	14	Screw	BMZ26P040FTC
	15	Screw	BMZ26P120FTC
	16	Screw	BMZ26P180FTC
	17	Screw	BPZ26P080FTC
	18	Screw(M2.6 x 14)	CBA1632
	19	Antenna Cable(CN401)	CDH1336
	20	Clamper	CEF1050
	21	Holder	CND3606
	22	Pin Jack(CN301)	CKB1051
	23	Plug(CN981)	CKM1278
	24	Plug(CN881)	CKS-786
	25	Plug(CN302)	CKS1238
	26	Connector(CN701)	CKS3834
	27	Connector(CN151)	See Contrast table(2)
	28	Connector(CN801)	CKS4811
	29	Connector(CN552)	CKS4977
	30	Connector(CN101)	CKS5271
	31	Connector(CN551)	CKS5321
	32	Connector(CN181)	CKS5523
	33	Holder(CN983)	CNC5399
	34	Holder	See Contrast table(2)
	35	Holder	CND3133
	36	Heat Sink	CNR1838
	37	FM/AM Tuner Unit	See Contrast table(2)
	38	Holder	CND1054
	39	Bluetooth Unit	CWN1771
	40	Connector(CN1)	CKS5058
	41	Connector(CN76)	CKS5320
	42	Shield	CND3134
	43	Sheet	CNM9598
	44	Transistor (Q453, Q751)	2SD2396
	45	Fan Motor(M891)	CXM1288
	46	7P FFC Connector (CN553)	VKN1299
	47	ZH Connector 2P (CN891)	VKN1928
	48	IC (IC911)	NJM2388F84
	49	Screw(M2 x 2)	CBA1871
	50	Screw(M2 x 2)	CBA1935
	51	Spring	CBH2530
	52	Connector	CKS5273
	53	Arm	CNV6962
	54	Guide	CNV6967
	55	Guide	CNV8048
	56	Case Unit	CXC5695
	57	Screw(M2 x 3.5)	XBA7002
	58	Holder	XNC7019
	59	Flexible PCB	XNP7026
	60	Screw(M2 x 3.5)	CBA2030
	61	Cord Assy	CDE8124
	62	Earth Plate	CND3138
	63	Holder	CND3139
	64	Antenna Unit	CWN1772
	65	Connector(ANT1102)	CKS5058
	66	BT Antenna (ANT1101)	CWX3132
	67	Panel Unit	CXC5696
	68	Drive Unit	CXC6622
	69	Screw	BMZ26P040FTC
	70	Screw(M2 x 2)	CBA1871
	71	Cord	CDE7392
	72	Gear	CNV7752
	73	Gear	CNV7753
	74	Gear	CNV7754
	75	Gear	CNV7755
	76	Switch Unit	CWS1389
	77	Switch(S1)	CSN1051
	78	Switch(S2)	CSN1052
	79	Arm Unit	CXC2199
	80	Arm Unit	CXC6623
	81	Arm Unit	CXC6624
	82	Screw	JFZ20P020FTC
	83	Spring	XBL7003
	84	Washer	YE15FTC
	85	CD Mechanism Module (S10.5)	CXK5752
	86	Screw	ISS26P055FTC
	87	IC (IC351)	PAL007B
	88	Holder	XNC7017
	89	Insulator	XNM7119
	90	Holder Unit	XXA7399
	91	Motor Unit(M881)	XXA7400
	92	Holder Unit	XXA7401
	93	Arm Unit	XXA7403
	94	Gear Unit	XXA7424
	95	Insulator	CNN1499

(2) CONTRAST TABLE

DEH-P75BT/XN/EW5 and DEH-P7850BT/XN/ES are constructed the same except for the following:

Mark	No.	Description	DEH-P75BT/XN/EW5	DEH-P7850BT/XN/ES
	5	Cord Assy	CDE8123	CDE7843
	12	Tuner Amp Unit	CWN1425	CWN1426
	27	Connector(CN151)	CKS4124	Not used
	34	Holder	CND3130	CND3131
	37	FM/AM Tuner Unit	CWE1951	CWE1952

2.5 CD MECHANISM MODULE(S10.5)

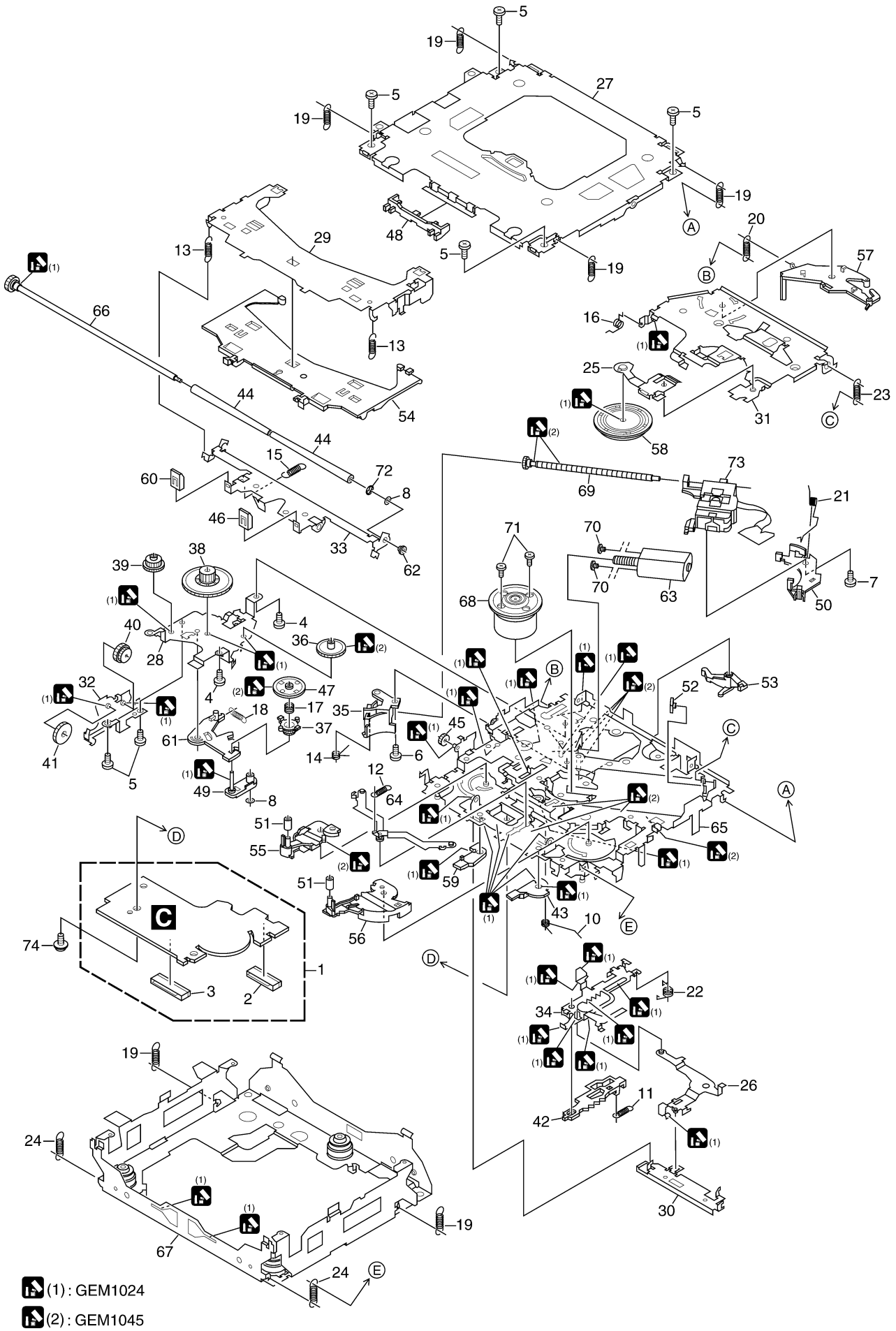

CD MECHANISM MODULE(S10.5) SECTION PARTS LIST

Mark	No.	Description	Part No.
	1	CD Core Unit(S10.5COMP1)	CWX3410
	2	Connector(CN101)	CKS4182
	3	Connector(CN901)	CKS5284
	4	Screw	BMZ20P025FTC
	5	Screw	BSZ20P040FTC
	6	Screw(M2 x 3)	CBA1511
	7	Screw(M2 x 4)	CBA1835
	8	Washer	CBF1038
	9	•••••	
	10	Spring	CBH2609
	11	Spring	CBH2612
	12	Spring	CBH2614
	13	Spring	CBH2616
	14	Spring	CBH2617
	15	Spring	CBH2620
	16	Spring	CBH2855
	17	Spring	CBH2937
	18	Spring	CBH2735
	19	Spring	CBH2854
	20	Spring	CBH2642
	21	Spring	CBH2856
	22	Spring	CBH2857
	23	Spring	CBH2860
	24	Spring	CBH2861
	25	Spring	CBL1686
	26	Arm	CND1909
	27	Frame	CND2582
	28	Bracket	CND2583
	29	Arm	CND2584
	30	Lever	CND2585
	31	Arm	CND2586
	32	Bracket	CND2587
	33	Arm	CND2588
	34	Lever	CND2589
	35	Holder	CNV7201
	36	Gear	CNV7207
	37	Gear	CNV7208
	38	Gear	CNV7209
	39	Gear	CNV7210
	40	Gear	CNV7211
	41	Gear	CNV7212
	42	Rack	CNV7214
	43	Arm	CNV7216
	44	Roller	CNV7218
	45	Gear	CNV7219
	46	Guide	CNV7361
	47	Gear	CNV7595
	48	Guide	CNV7799
	49	Arm	CNV7805
	50	Rack	CNV8342
	51	Roller	CNV8343
	52	Holder	CNV8344
	53	Arm	CNV8345
	54	Guide	CNV8347
	55	Arm	CNV8348
	56	Arm	CNV8349
	57	Arm	CNV8350
	58	Clamper	CNV8365
	59	Arm	CNV8386
	60	Guide	CNV8396
	61	Arm	CNV8413
	62	Collar	CNV8938
	63	Motor Unit(M2)	CXC4026
	64	Arm Unit	CXC4027
	65	Chassis Unit	CXC4028
	66	Gear Unit	CXC4029
	67	Frame Unit	CXC4031
	68	Motor Unit(M1)	CXC7134
	69	Screw Unit	CXC6359
	70	Screw	JFZ20P020FTC
	71	Screw	JGZ17P022FTC
	72	Washer	YE20FTC
	73	Pickup Unit(P10.5)(Service)	CXX1942
	74	Screw	IMS26P030FTC

3. BLOCK DIAGRAM AND SCHEMATIC DIAGRAM

3.1 BLOCK DIAGRAM

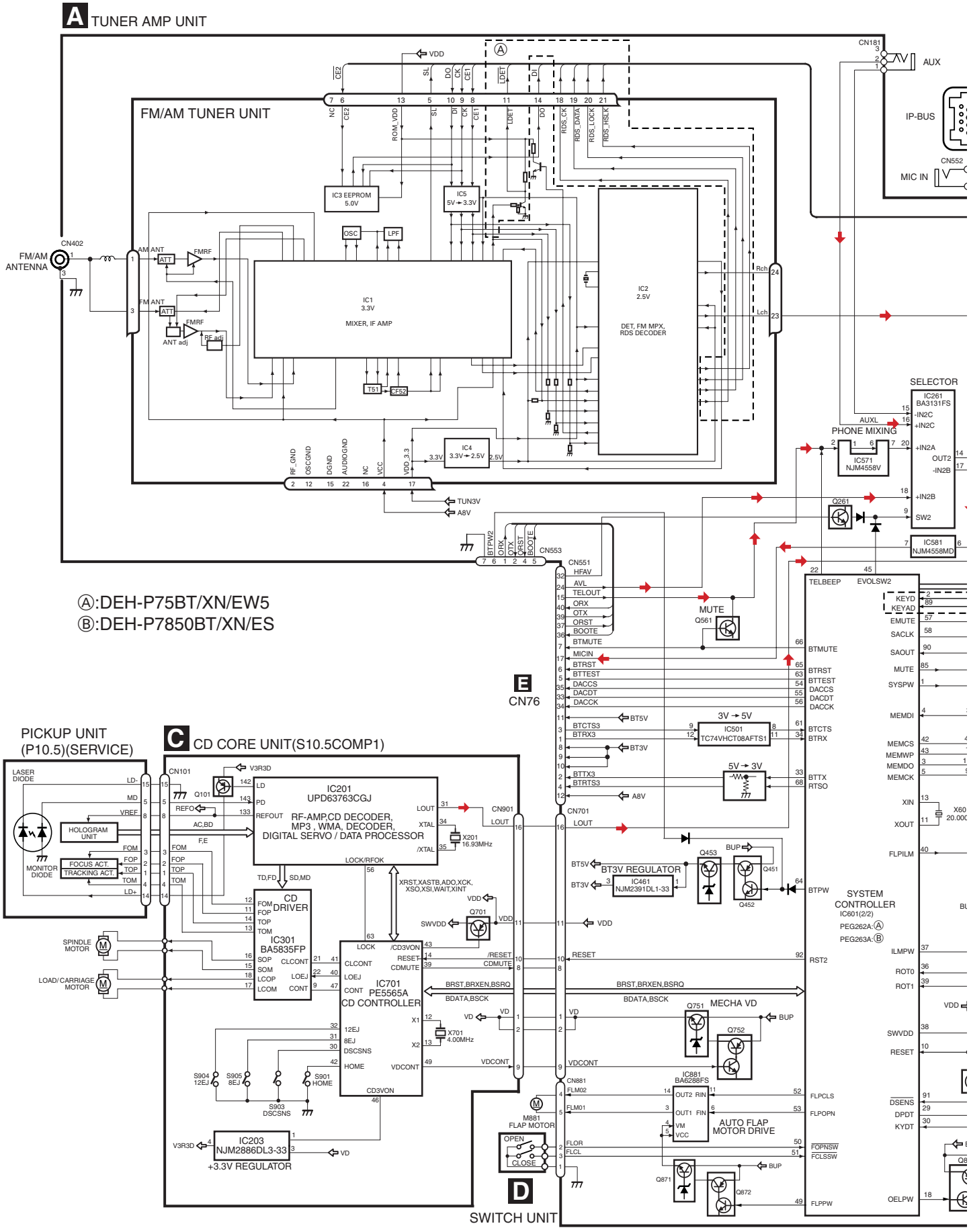

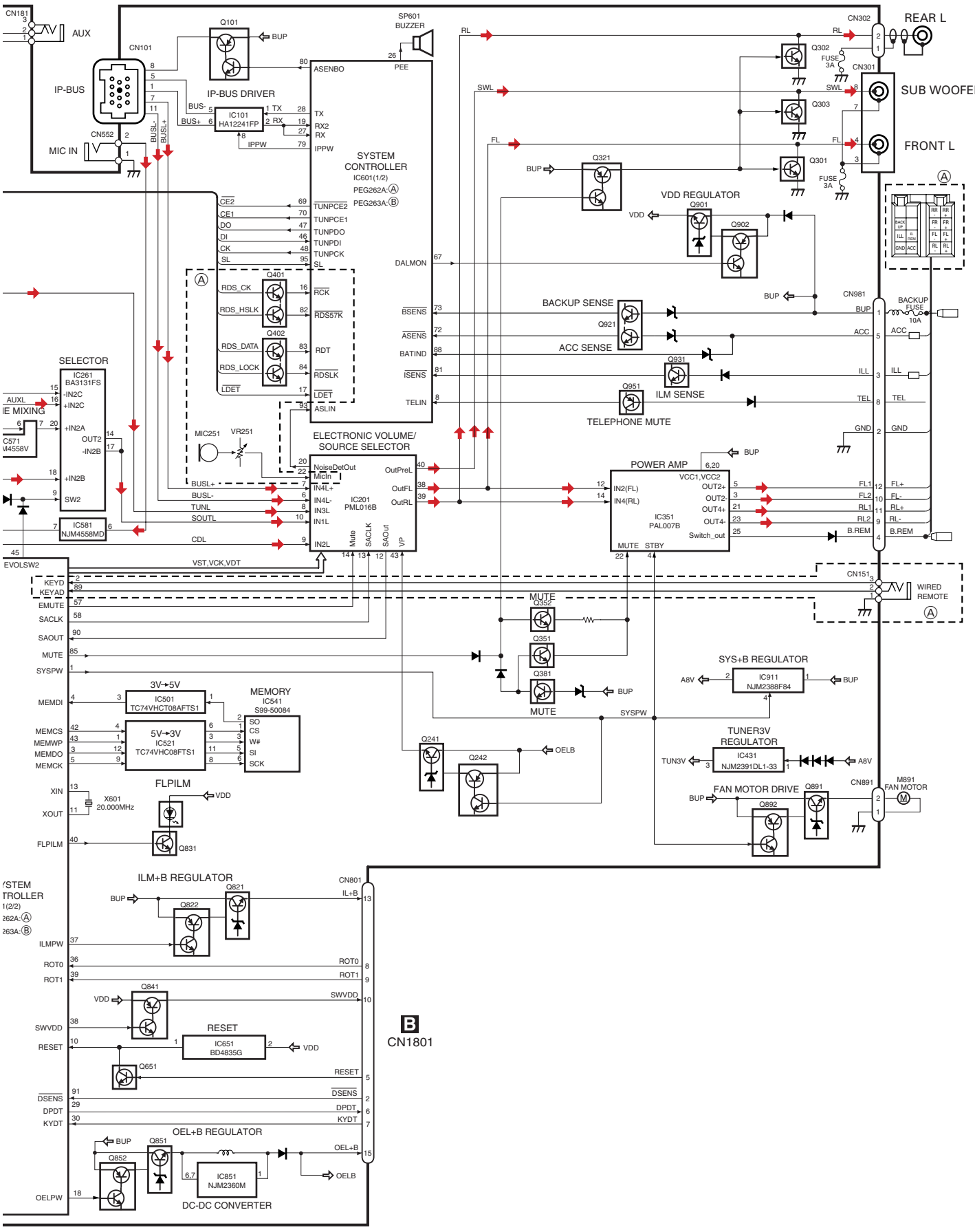
AUX
IP-BUS
MIC IN
IP-BUS DRIVER
IC101 HA12241FP
SYSTEM CONTROLLER
IC601(1/2)
PEG262A:Ⓐ
PEG263A:Ⓑ
SP601 BUZZER
REAR L
SUB WOOFER L
FRONT L
VDD REGULATOR
BACKUP SENSE
ACC SENSE
ILM SENSE
TELEPHONE MUTE
SELECTOR
IC261 BA3131FS
ELECTRONIC VOLUME/ SOURCE SELECTOR
IC201 PML016B
POWER AMP
IC351 PAL007B
MUTE
SYS+B REGULATOR
IC911 NJM2388F84
TUNER3V REGULATOR
IC431 NJM2391DL1-33
FAN MOTOR DRIVE
WIRED REMOTE
3V→5V
IC501 TC74VHCT08AFTS1
5V→3V
IC521 TC74VHC08FTS1
MEMORY
IC541 S99-50084
FLPILM
X601 20.000MHz
ILM+B REGULATOR
RESET
IC651 BD4835G
OEL+B REGULATOR
IC851 NJM2360M
DC-DC CONVERTER
CN1801

B KEYBOARD UNIT

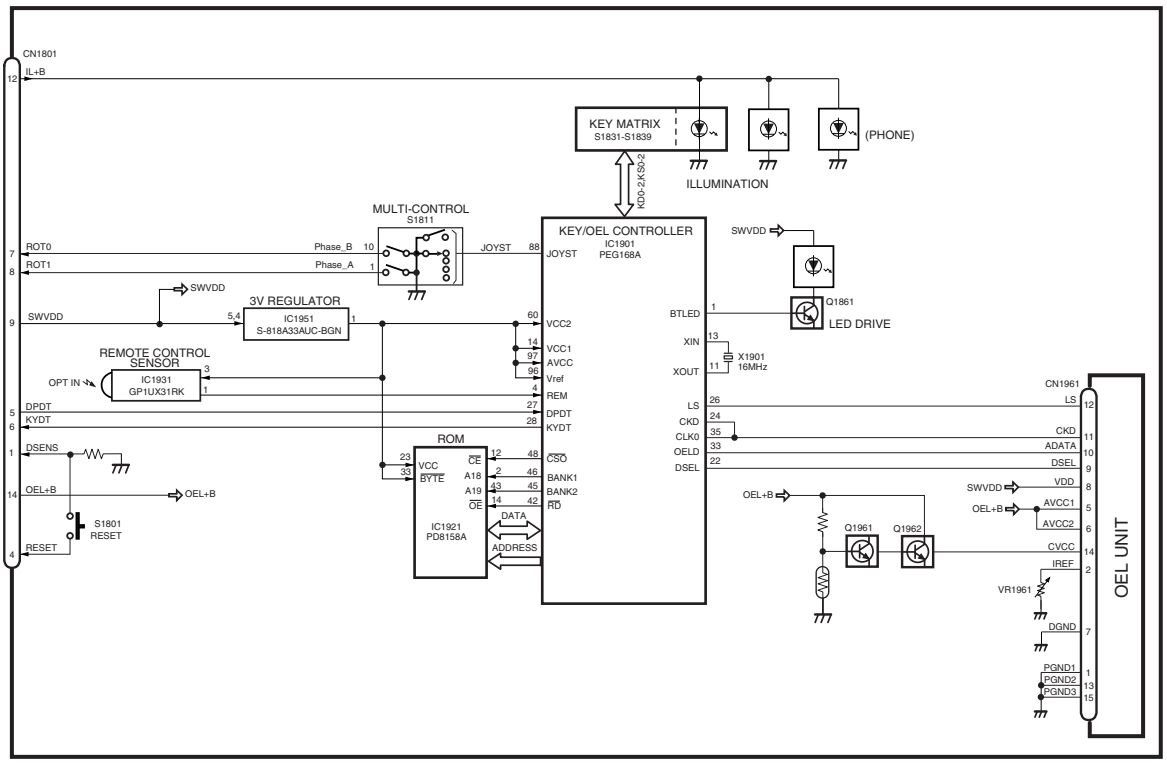

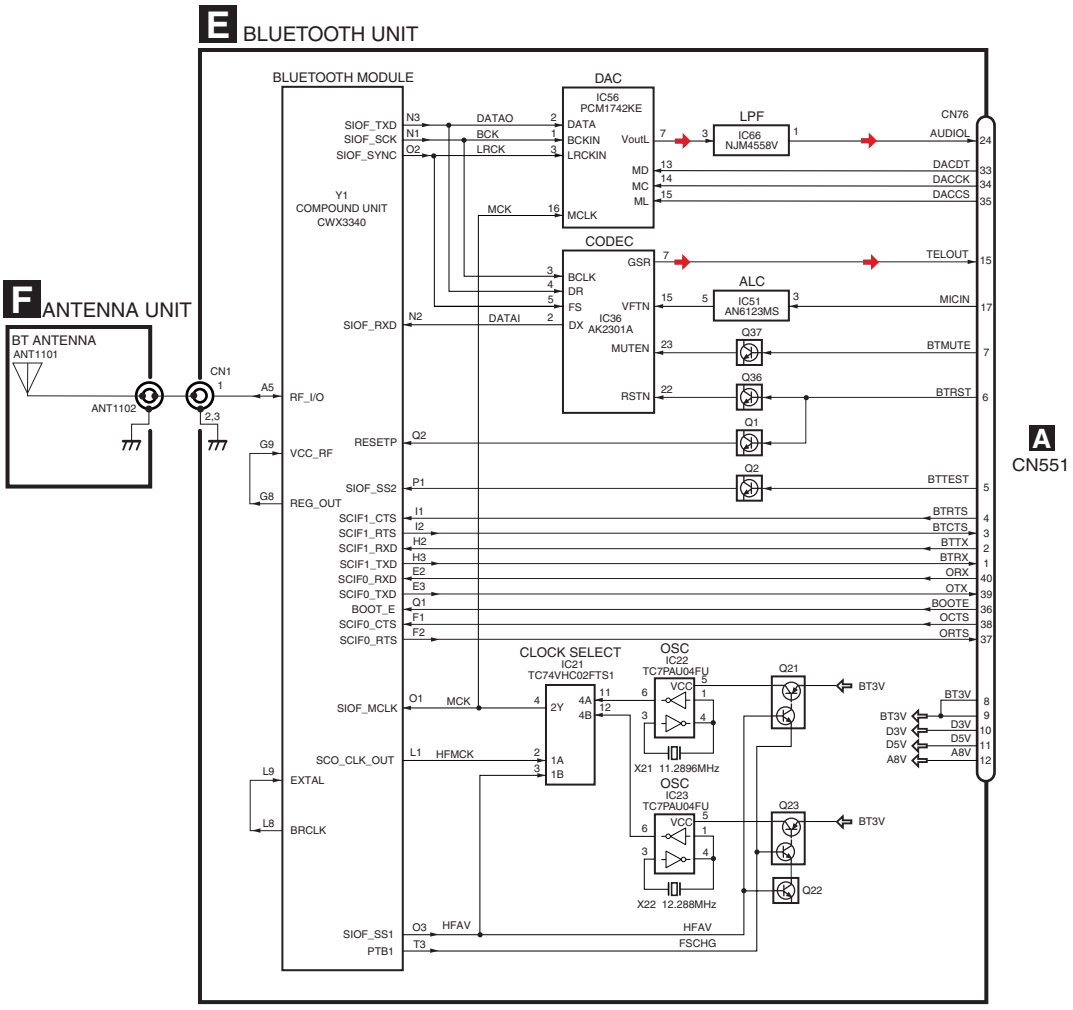
E BLUETOOTH UNIT
BLUETOOTH MODULE
DAC
IC56
PCM1742KE
LPF
IC66
NJM4558V
CN76
AUDIOL
DACDT
DACCK
DACCS
Y1
COMPOUND UNIT
CWX3340
CODEC
TELOUT
ALC
IC51
AN6123MS
MICIN
IC36
AK2301A
BTMUTE
BTRST
BTTEST
BTRTS
BTCTS
BTTX
BTRX
ORX
OTX
BOOTE
OCTS
ORTS
CLOCK SELECT
IC21
TC74VHC02FTS1
OSC
IC22
TC7PAU04FU
X21 11.2896MHz
IC23
TC7PAU04FU
X22 12.288MHz
Q21
Q22
Q23
BT3V
D3V
D5V
A8V
HFAV
FSCHG
F ANTENNA UNIT
BT ANTENNA
ANT1101
ANT1102
CN1
RF_I/O
VCC_RF
REG_OUT
EXTAL
BRCLK
A
CN551

3.2 OVERALL CONNECTION DIAGRAM(GUIDE PAGE)

Note: When ordering service parts, be sure to refer to " EXPLODED VIEWS AND PARTS LIST" or "ELECTRICAL PARTS LIST".

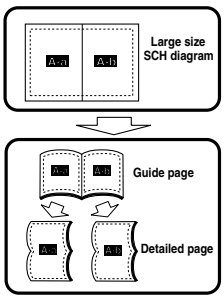

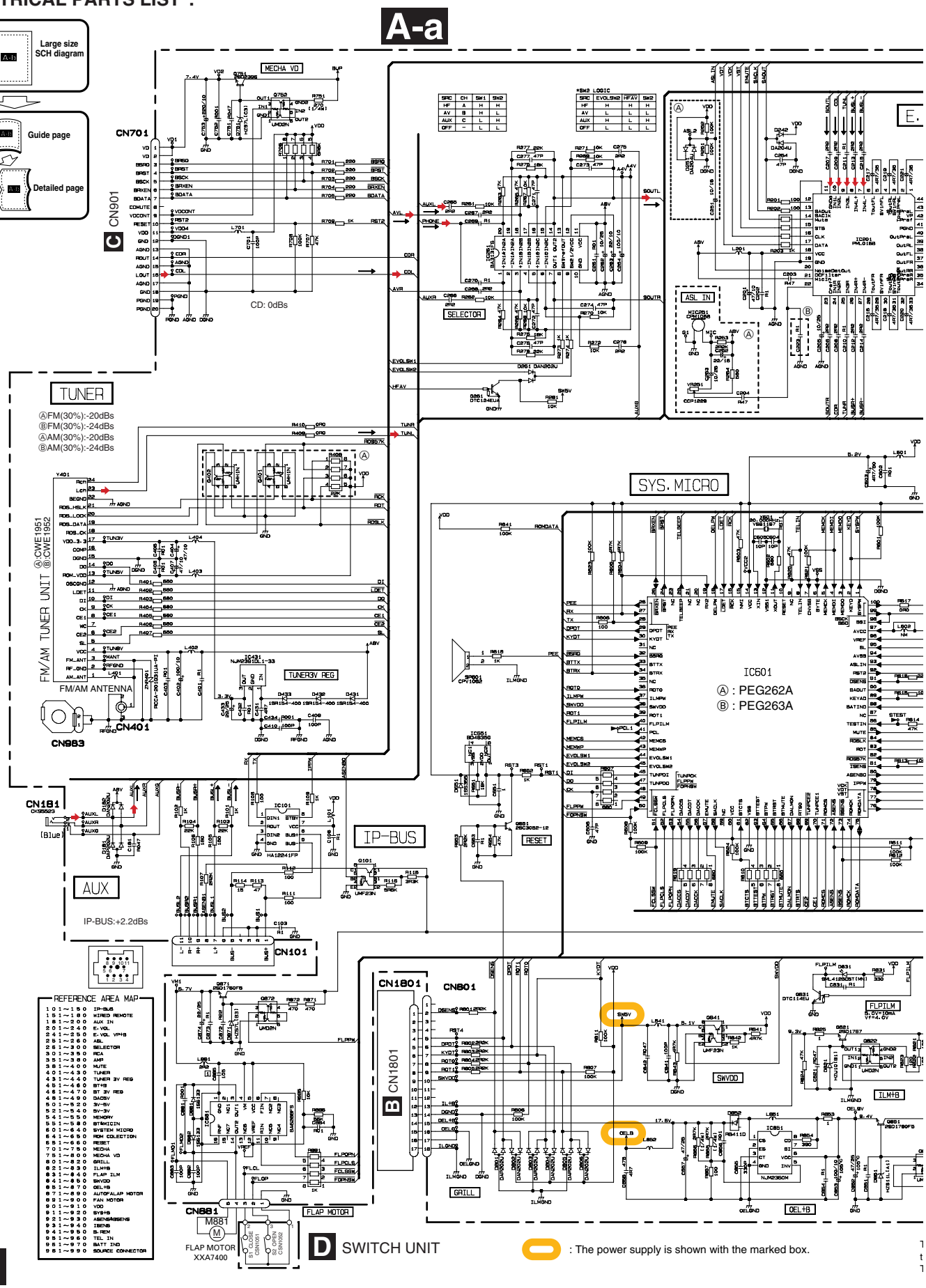

A-b

A TUNER AMP UNIT

Ⓐ:DEH-P75BT/XN/EW5
Ⓑ:DEH-P7850BT/XN/ES

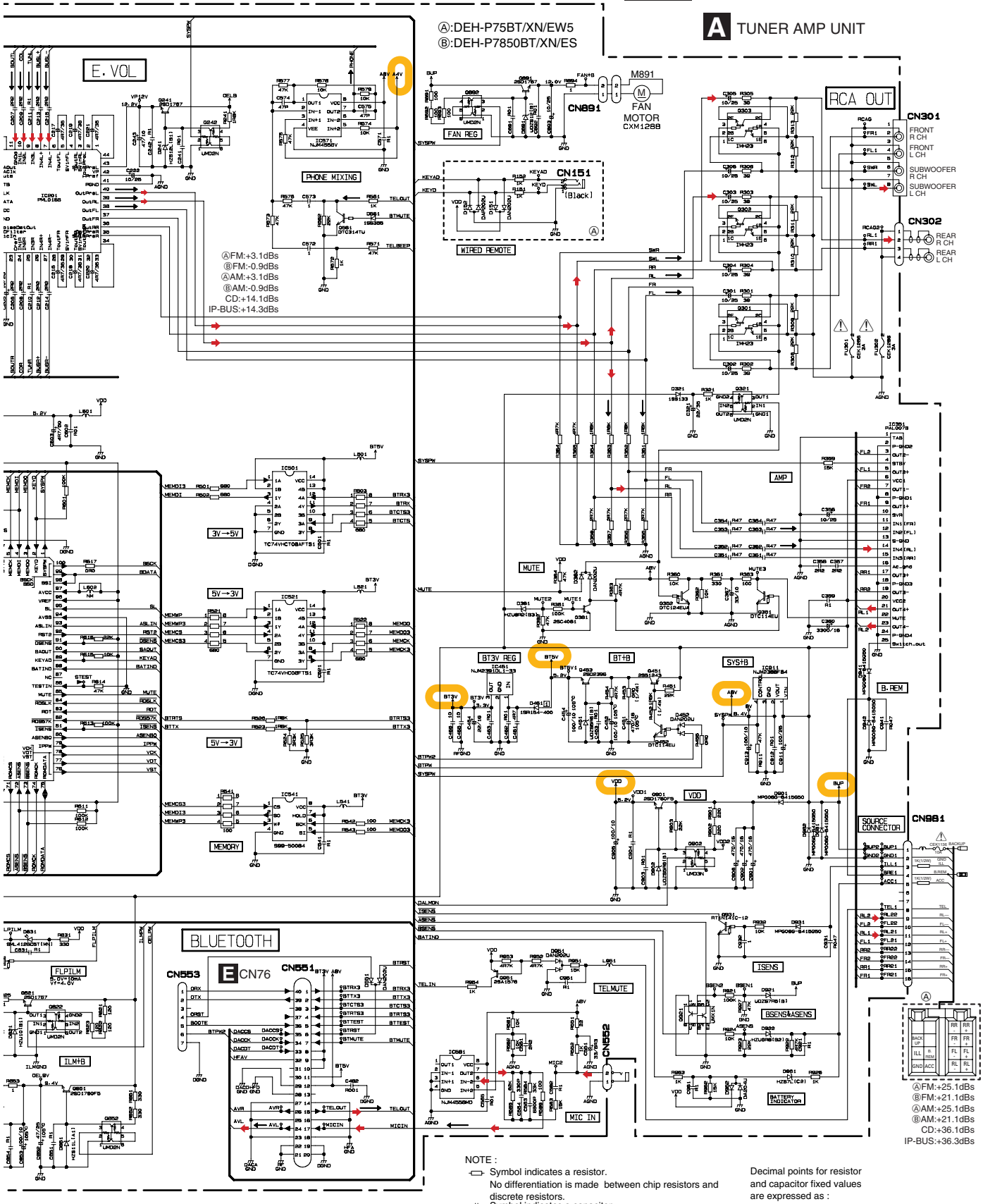

NOTE :
- Symbol indicates a resistor. No differentiation is made between chip resistors and discrete resistors.
- Symbol indicates a capacitor. No differentiation is made between chip capacitors and discrete capacitors.

Decimal points for resistor and capacitor fixed values are expressed as :
2.2→2R2
0.022→R022

The ⚠ mark found on some component parts indicates the importance of the safety factor of the part.
Therefore, when replacing, be sure to use parts of identical designation.

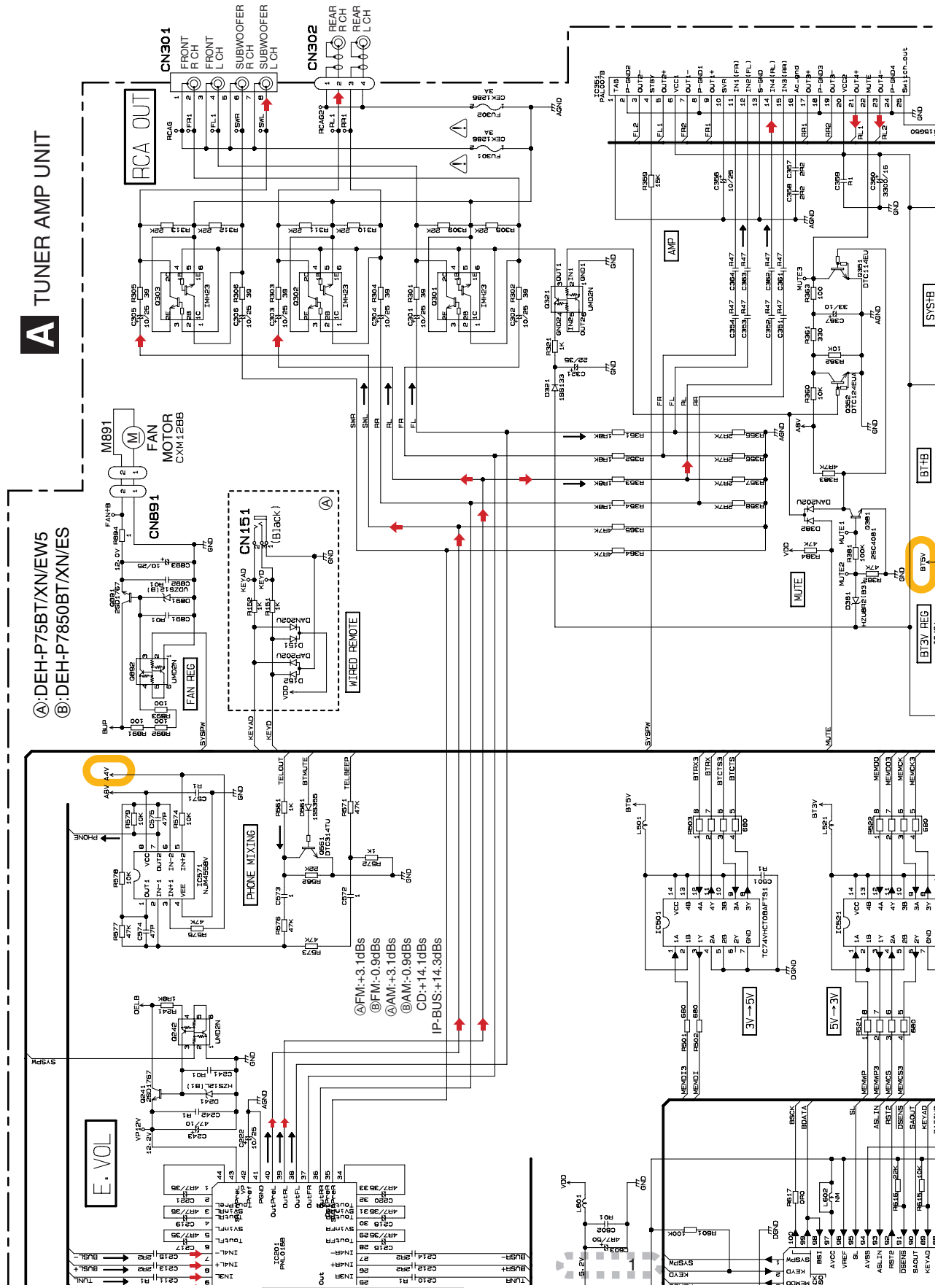
A TUNER AMP UNIT
Ⓐ:DEH-P75BT/XN/EW5
Ⓑ:DEH-P7850BT/XN/ES
RCA OUT
CN301
FRONT R CH
FRONT L CH
SUBWOOFER R CH
SUBWOOFER L CH
CN302
REAR R CH
REAR L CH
M891
FAN MOTOR CXM1288
CN891
CN151
(Black)
WIRED REMOTE
FAN REG
AMP
MUTE
BT3V REG
BT+B
SYS+B
PHONE MIXING
E. VOL
3V→5V
5V→3V
ⒶFM:+3.1dBs
ⒷFM:-0.9dBs
ⒶAM:+3.1dBs
ⒷAM:-0.9dBs
CD:+14.1dBs
IP-BUS:+14.3dBs

A-a A-b

A-b

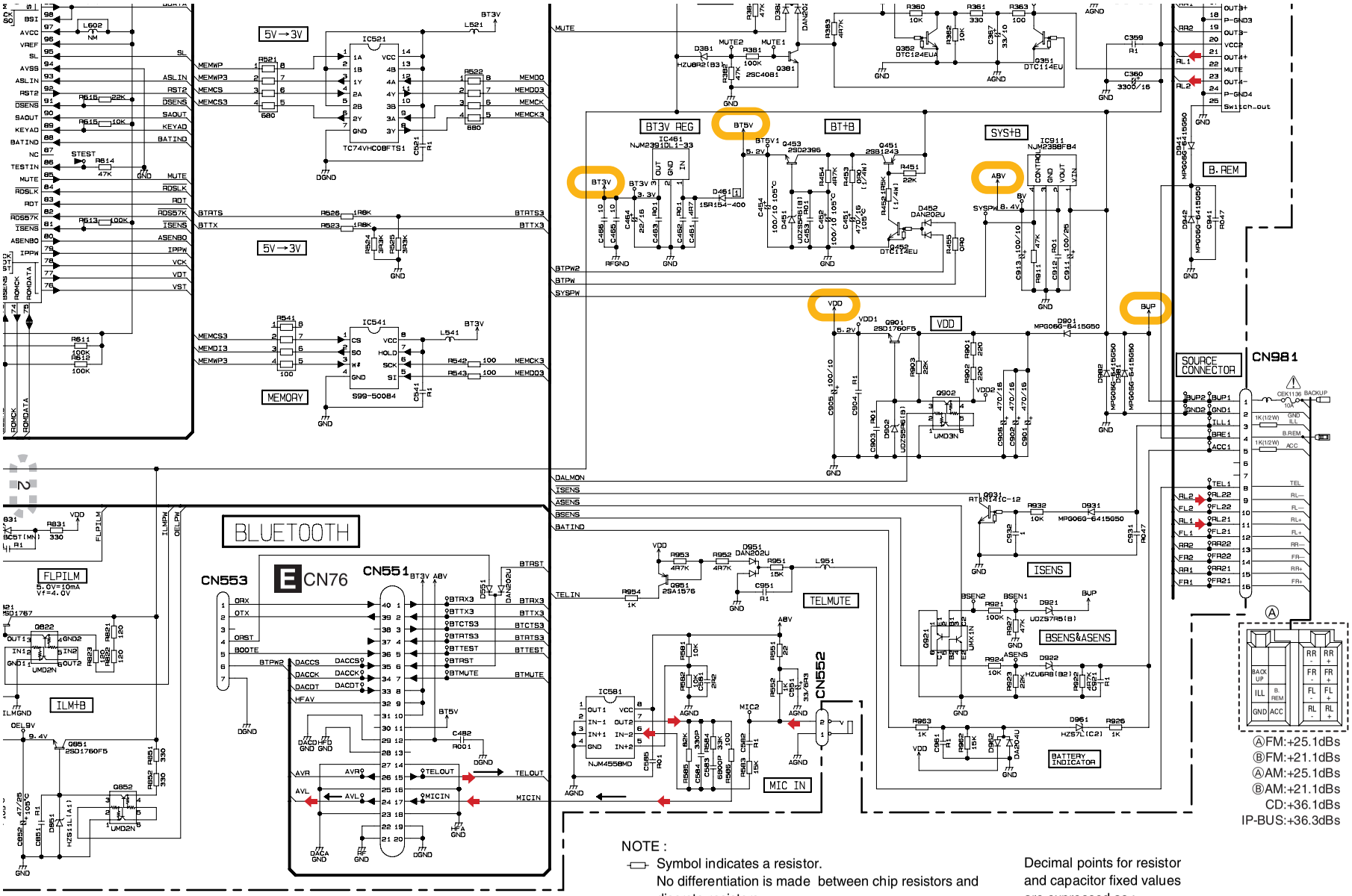

DEH-P75BT/XN/EW5

The ⚠ mark found on some component parts indicates the importance of the safety factor of the part.
Therefore, when replacing, be sure to use parts of identical designation.

NOTE :

- Symbol indicates a resistor. No differentiation is made between chip resistors and discrete resistors.
- Symbol indicates a capacitor. No differentiation is made between chip capacitors and discrete capacitors.

Decimal points for resistor and capacitor fixed values are expressed as :
2.2→2R2
0.022→R022

A-b

A-a A-b

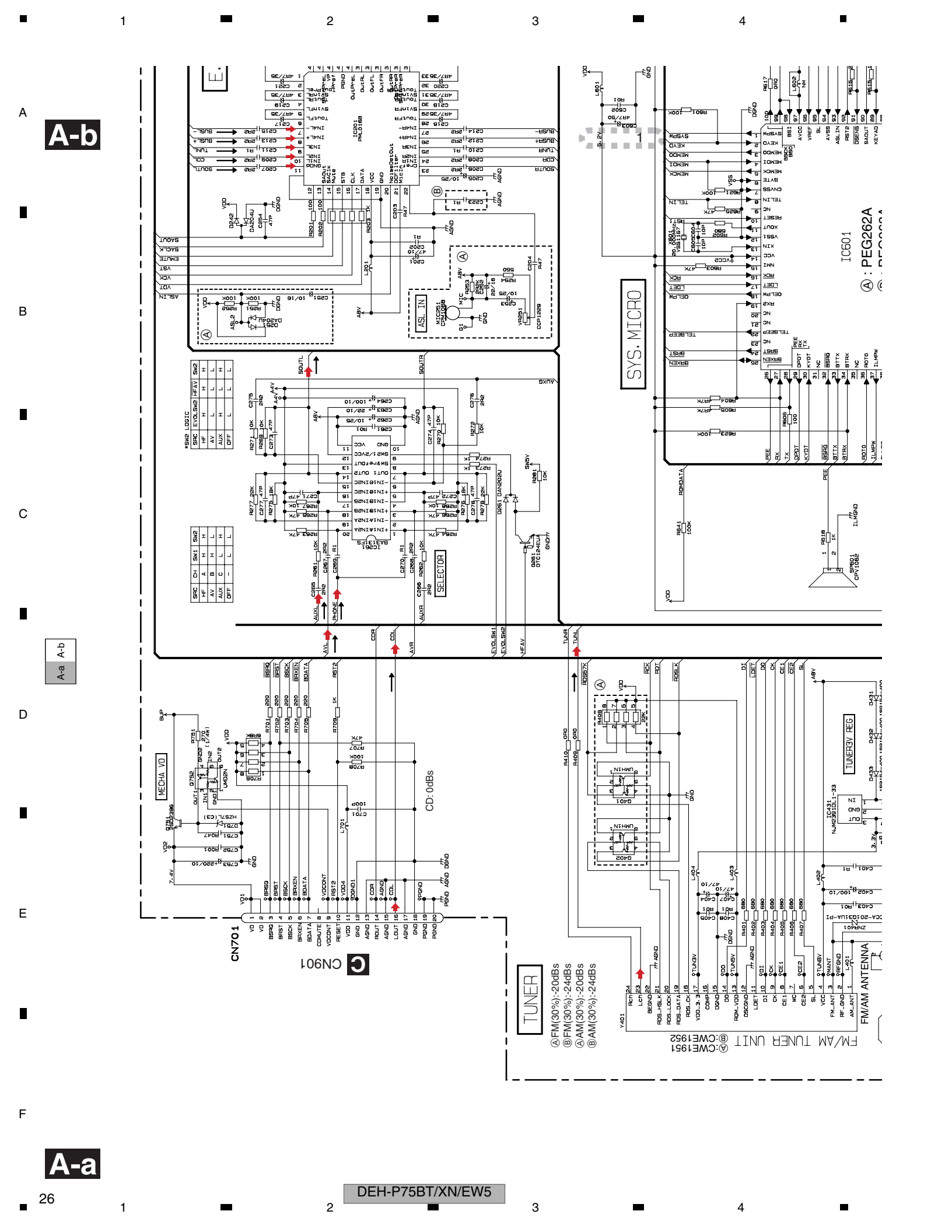
A-b
A-a
A-b
A-a
SYS. MICRO
IC601
Ⓐ : PEG262A
SELECTOR
ASL IN
MECHA VD
CN701
CN901
CD: 0dBs
TUNER
Ⓐ FM(30%):-20dBs
Ⓑ FM(30%):-24dBs
Ⓐ AM(30%):-20dBs
Ⓑ AM(30%):-24dBs
TUNER3V REG
FM/AM ANTENNA
FM/AM TUNER UNIT
Ⓐ:CWE1951
Ⓑ:CWE1952

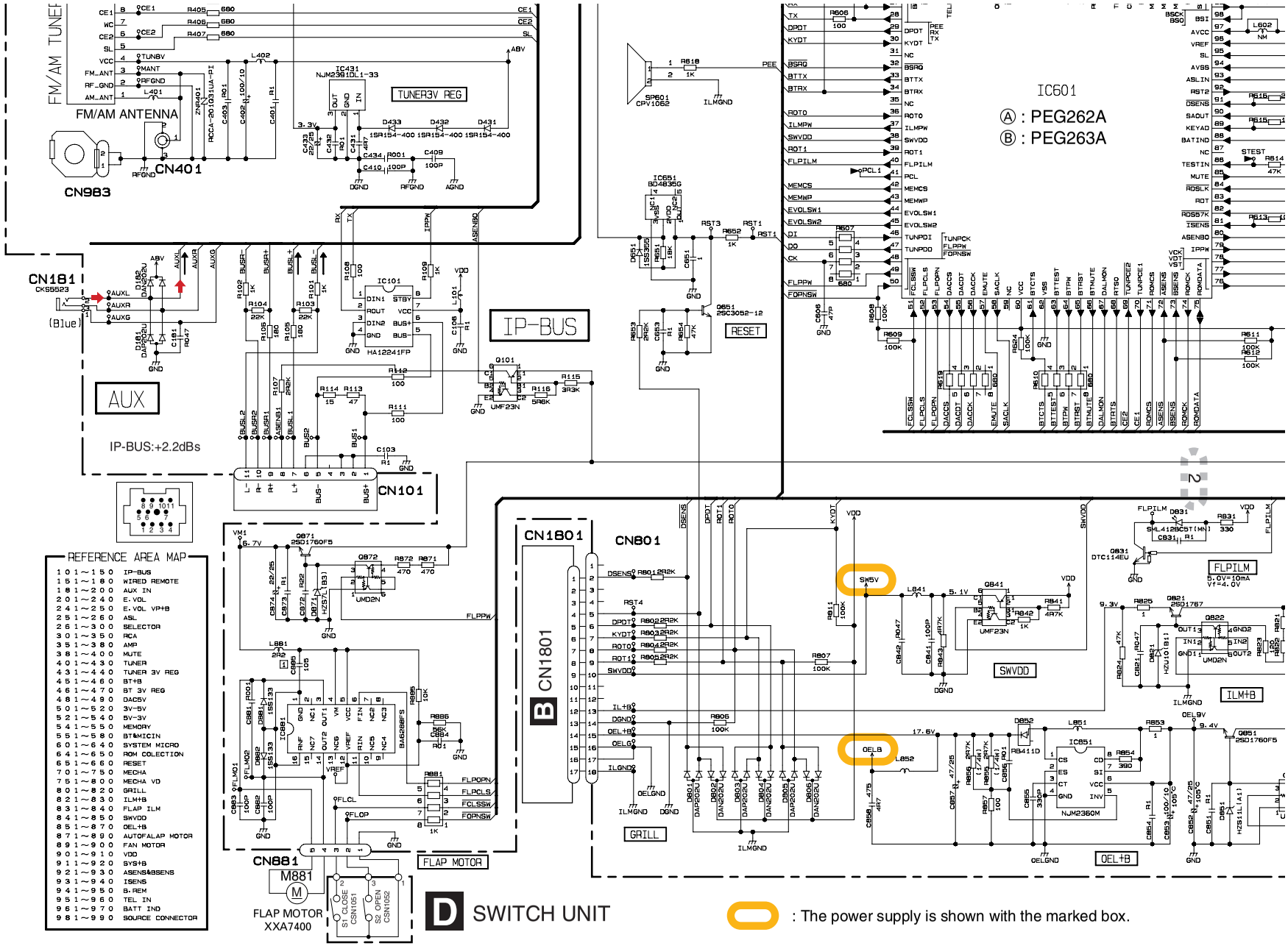

REFERENCE AREA MAP

101～150	IP-BUS
151～180	WIRED REMOTE
181～200	AUX IN
201～240	E.VOL
241～250	F.VOL VP+B
251～260	ASL
261～300	SELECTOR
301～350	RCA
351～380	AMP
381～400	MUTE
401～430	TUNER
431～440	TUNER 3V REG
451～460	BT+B
461～470	BT 3V REG
481～490	DAC5V
501～520	3V-5V
521～540	5V-3V
541～550	MEMORY
551～580	BT&MICIN
601～640	SYSTEM MICRO
641～650	ROM COLECTION
651～660	RESET
701～750	MECHA
751～800	MECHA VD
801～820	GRILL
821～830	ILM+B
831～840	FLAP ILM
841～850	SWVDD
851～870	OEL+B
871～890	AUTOFALAP MOTOR
891～900	FAN MOTOR
901～910	VDD
911～920	SYS+B
921～930	ASENS&BSENS
931～940	ISENS
941～950	B.REM
951～960	TEL IN
961～970	BATT IND
981～990	SOURCE CONNECTOR

A-a D

A-b

A-a A-b

3.3 KEYBOARD UNIT

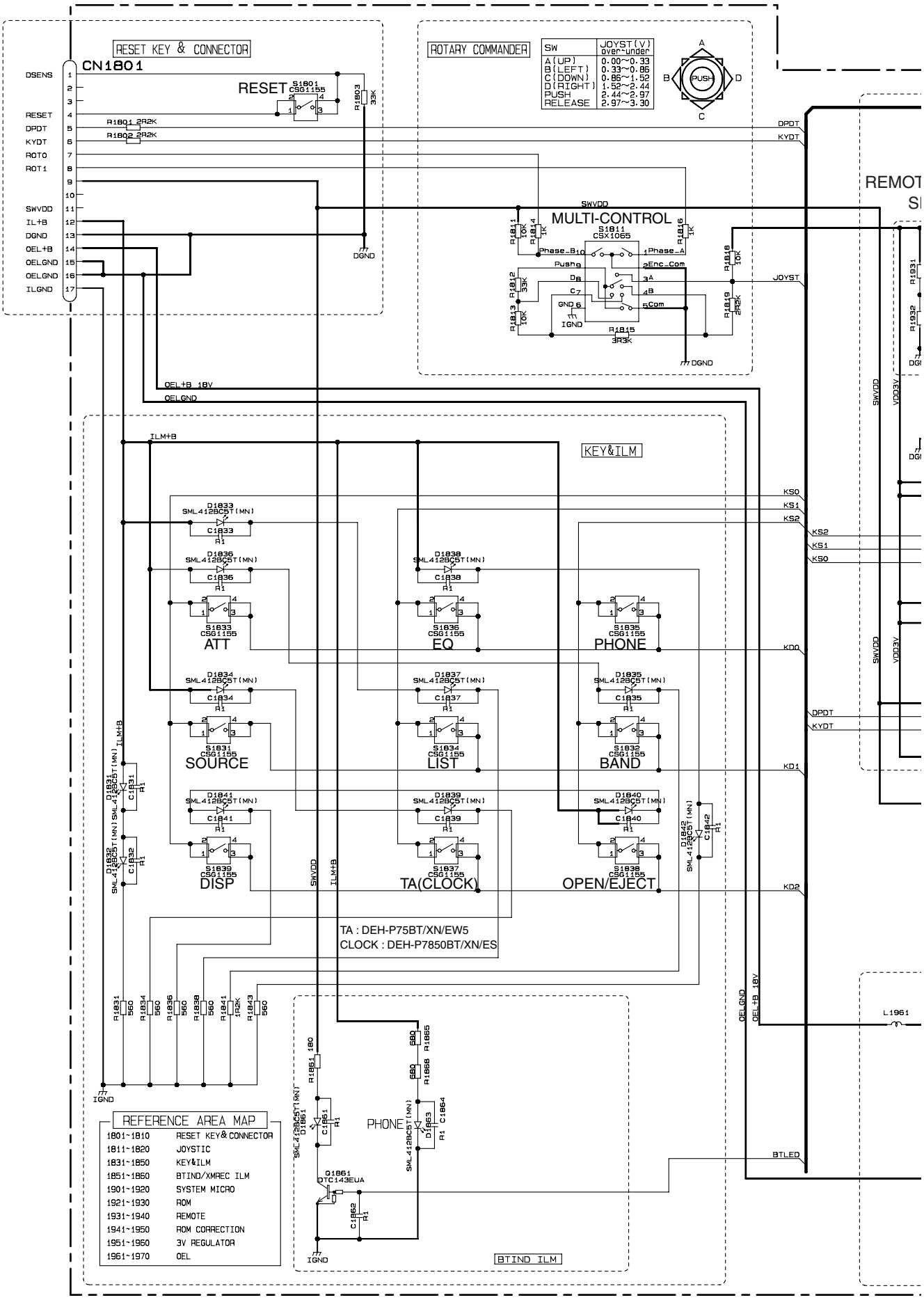

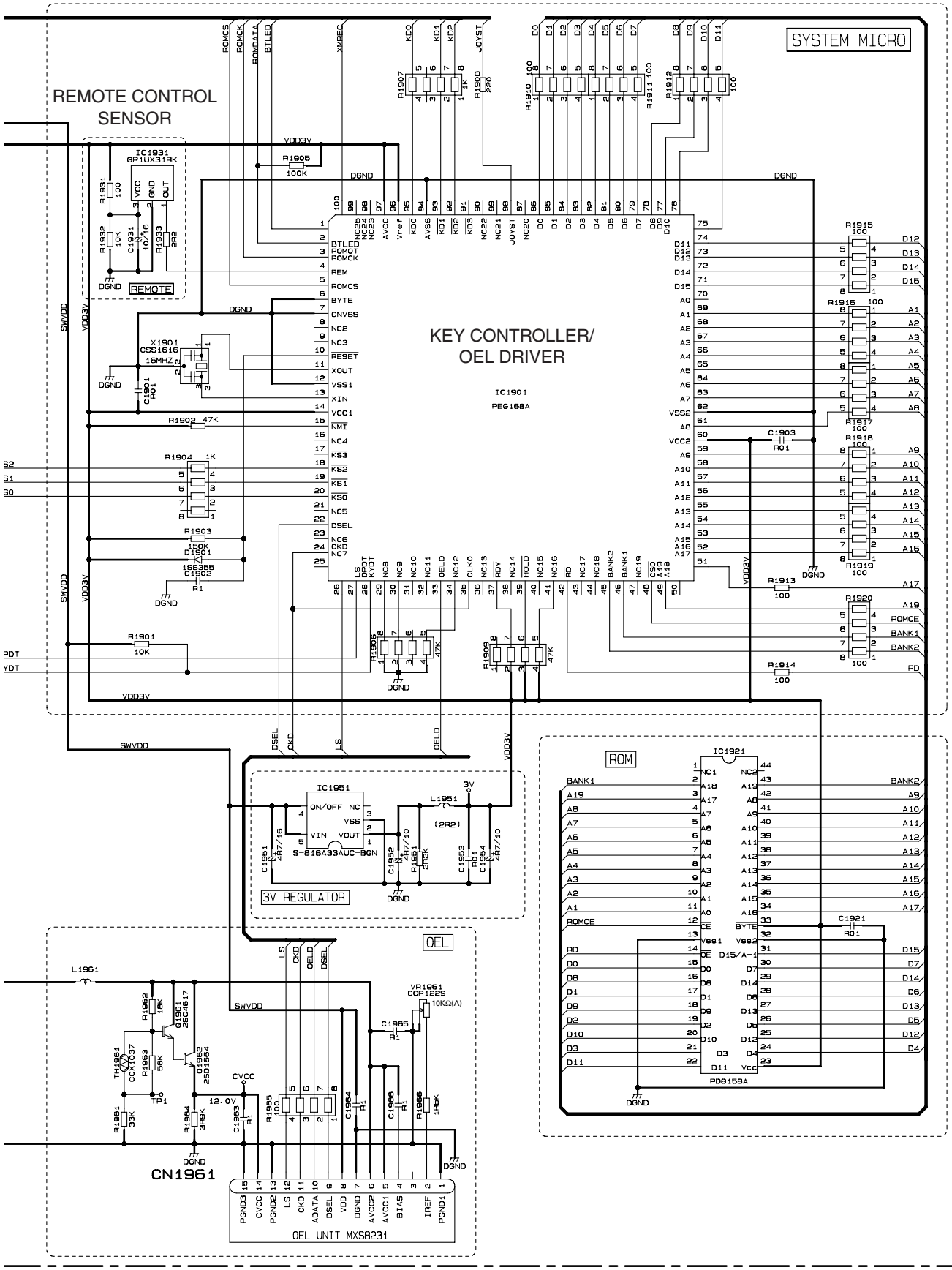
SYSTEM MICRO
REMOTE CONTROL SENSOR
KEY CONTROLLER/ OEL DRIVER
IC1901
PEG168A
REMOTE
3V REGULATOR
ROM
OEL
OEL UNIT MXS8231
CN1961
PD8158A

3.4 CD MECHANISM MODULE(S10.5)(GUIDE PAGE)

C-a

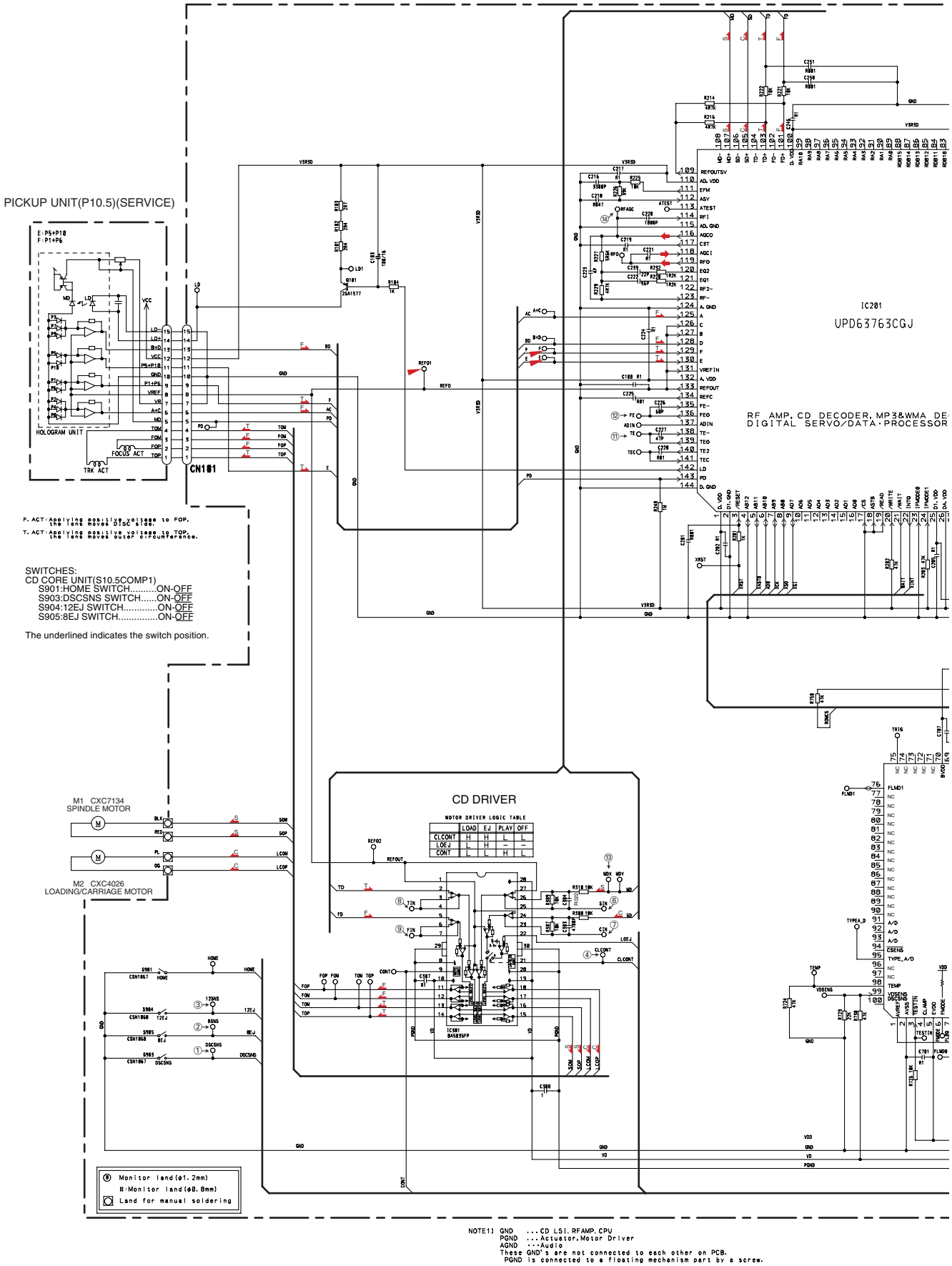

C-b

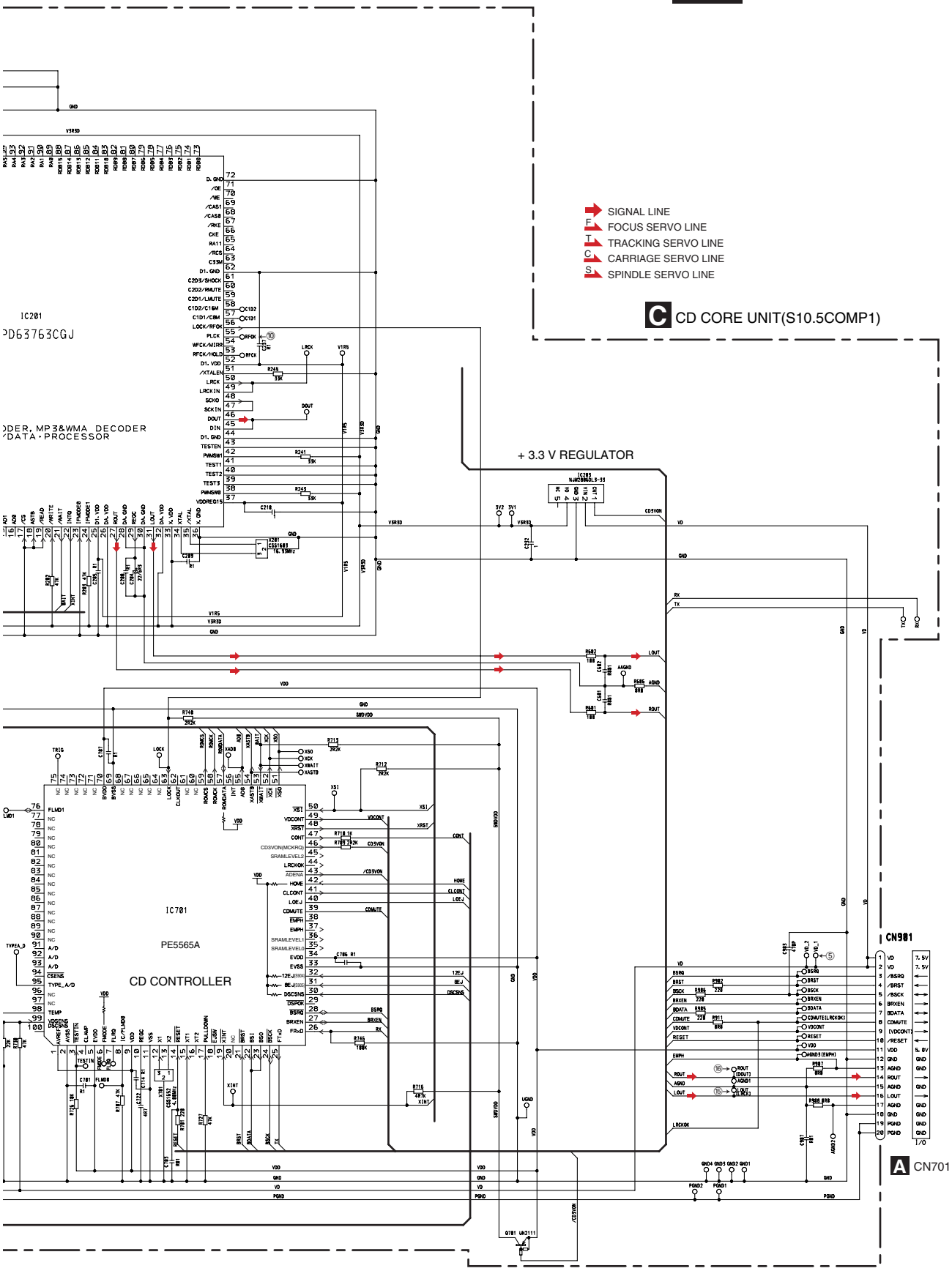
SIGNAL LINE
F FOCUS SERVO LINE
T TRACKING SERVO LINE
C CARRIAGE SERVO LINE
S SPINDLE SERVO LINE
C CD CORE UNIT(S10.5COMP1)
+ 3.3 V REGULATOR
IC201
PD63763CGJ
IC701
PE5565A
CD CONTROLLER
CN981
A CN701

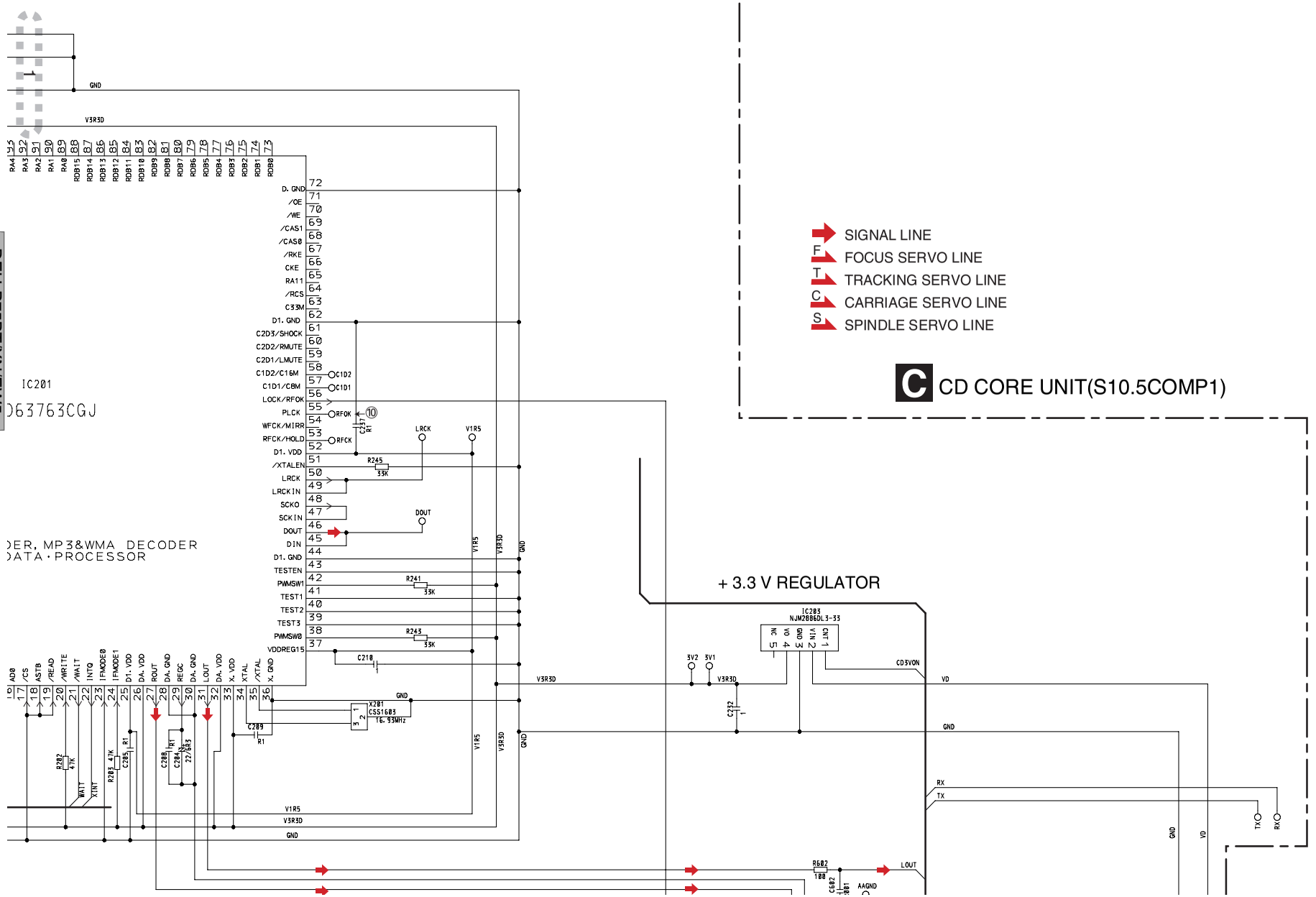
SIGNAL LINE
FOCUS SERVO LINE
TRACKING SERVO LINE
CARRIAGE SERVO LINE
SPINDLE SERVO LINE
C CD CORE UNIT(S10.5COMP1)
+ 3.3 V REGULATOR
IC201
IC203
NJM2886DL3-33
X201
16.93MHz
GND
V3R3D
V1R5
LRCK
DOUT
RFOK
RFCK
CD3VON
VD
RX
TX
LOUT
AAGND

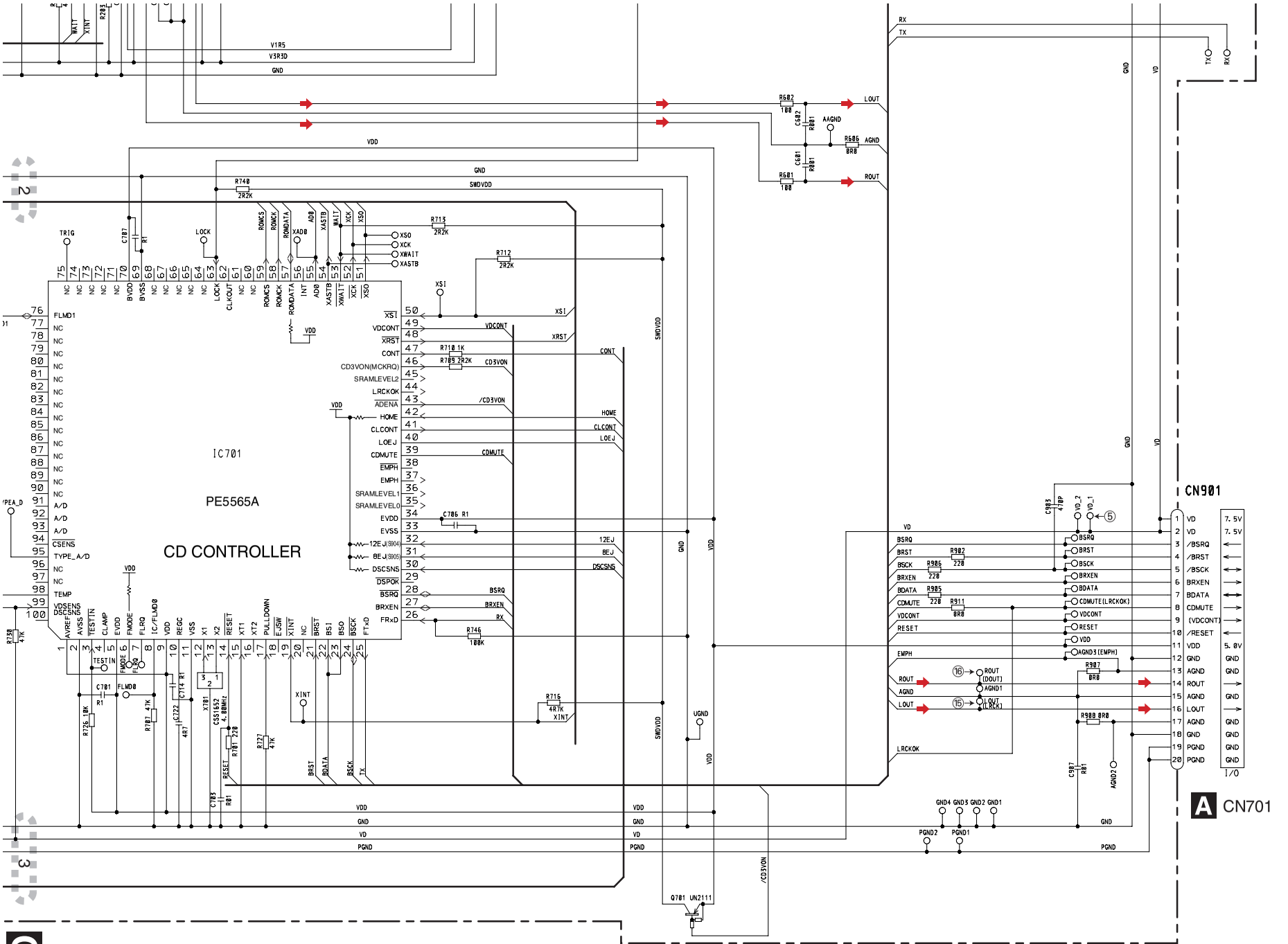
IC701
PE5565A
CD CONTROLLER
CN901
CN701
A
C-b
C-a
Q701 UN2111
R710 1K
R709 2R2K
R746 100K
R716 4R7K
R602 100
R601 100
R606 0R0
R907 0R0
R988 0R0
R902 220
R906 220
R905 220
R911 0R0
C706 R1
C707 R1
C701 R1
C703 R01
C714 R1
C722 4R7
C907 R01
C903 470P
X701 CSS1652 4.00MHz
R726 10K
R727 47K
R728 47K
R730 47K
R781 220
R740 2R2K
R713 2R2K
R712 2R2K
VDD
GND
SWDVDD
VD
PGND
UGND
AAGND
AGND2
PGND1
PGND2
GND1
GND2
GND3
GND4
LOUT
ROUT
RX
TX
XSI
XSO
XCK
XWAIT
XASTB
XRST
VDCONT
CONT
CD3VON
/CD3VON
HOME
CLCONT
LOEJ
CDMUTE
12EJ
BEJ
DSCSNS
BSRQ
BRXEN
LRCKOK
RESET
XINT
TRIG
LOCK
BSRQ
BRST
BSCK
BRXEN
BDATA
CDMUTE(LRCKOK)
VDCONT
RESET
VD
AGND3 (EMPH)
EMPH
ROUT (DOUT)
AGND1
LOUT (LRCK)
7. 5V
7. 5V
I/O

C-a C-b

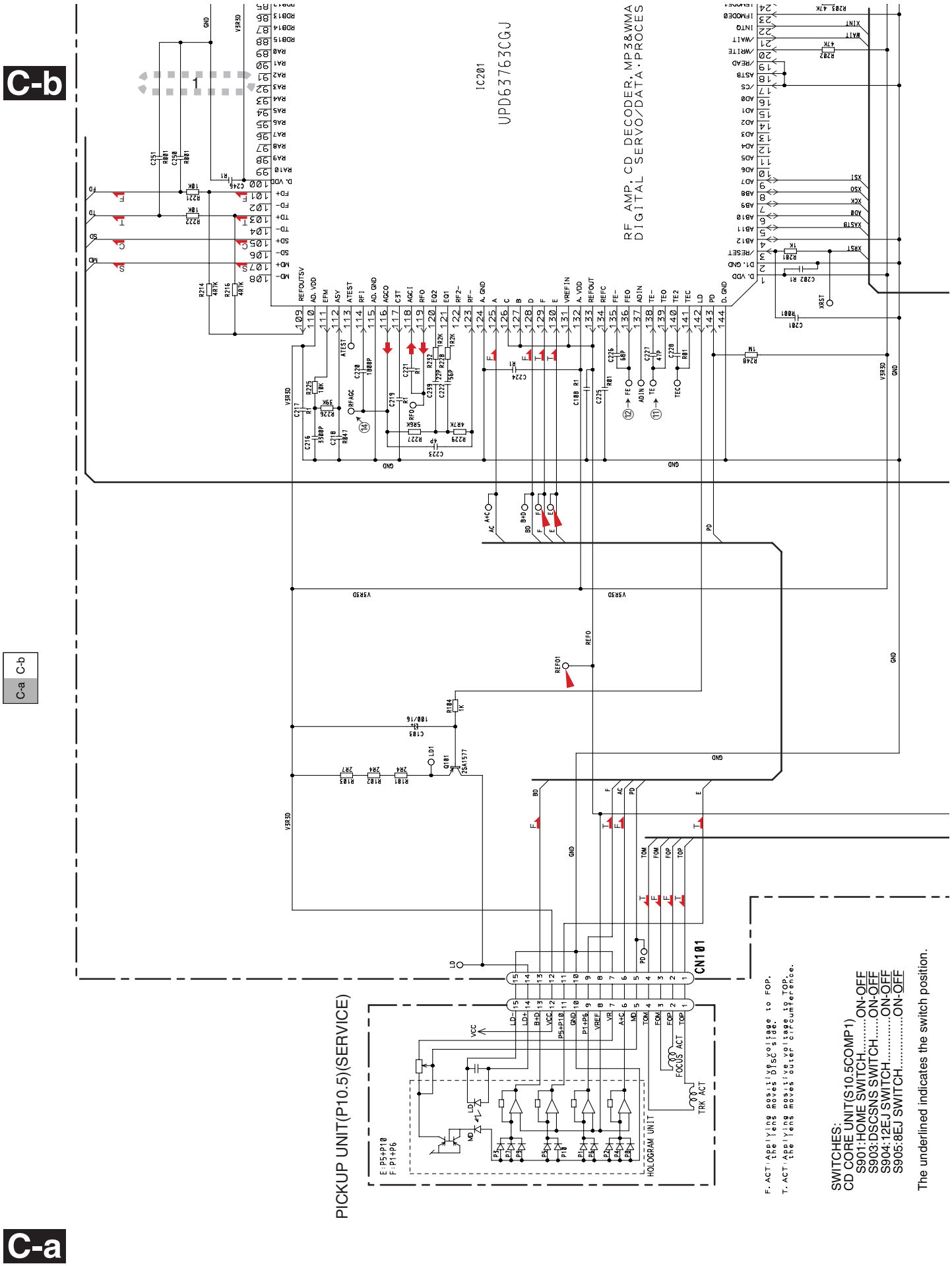
C-b
C-a
IC201
UPD63763CGJ
RF AMP, CD DECODER, MP3&WMA
DIGITAL SERVO/DATA PROCES
PICKUP UNIT(P10.5)(SERVICE)
E: P5+P10
F: P1+P6
HOLOGRAM UNIT
CN101
F. ACT Applying positive voltage to FOP.
T. ACT Applying positive voltage to TOP.
SWITCHES:
CD CORE UNIT(S10.5COMP1)
S901:HOME SWITCH.....ON-OFF
S903:DSCSNS SWITCH.....ON-OFF
S904:12EJ SWITCH.....ON-OFF
S905:8EJ SWITCH.....ON-OFF
The underlined indicates the switch position.

SWITCHES:
CD CORE UNIT(S10.5COMP1)
S901:HOME SWITCH.....ON-OFF
S903:DSCSNS SWITCH.....ON-OFF
S904:12EJ SWITCH.....ON-OFF
S905:8EJ SWITCH.....ON-OFF

The underlined indicates the switch position.

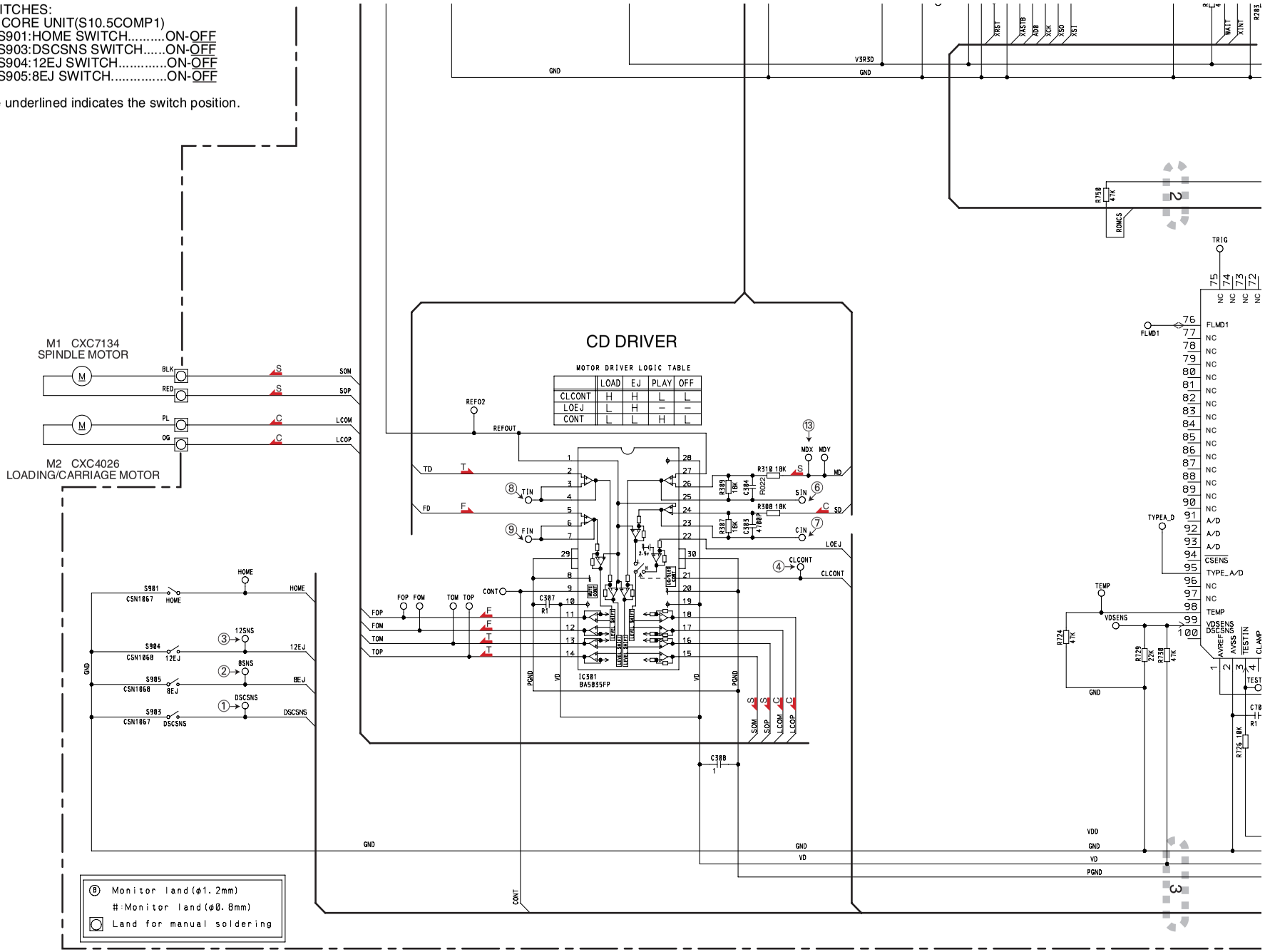

NOTE1) GND ...CD LSI, RFAMP, CPU
PGND ...Actuator, Motor Driver
AGND ...Audio
These GND's are not connected to each other on PCB.
PGND is connected to a floating mechanism part by a screw.

C-a C-b

● Waveforms

Note : 1. The encircled numbers denote measuring points in the circuit diagram.
2. Reference voltage REFO1(1.65 V)

① DSCSNS 5 V/div 500 ms/div ② 8SNS 5 V/div ③ 12SNS 5 V/div 12 cm CD Loading operation 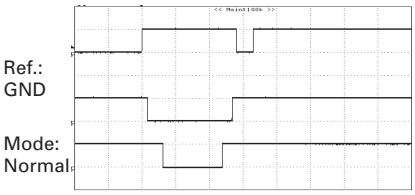 	① DSCSNS 5 V/div 500 ms/div ④ CLCONT 5 V/div ⑤ VD 10 V/div 12 cm CD Loading operation 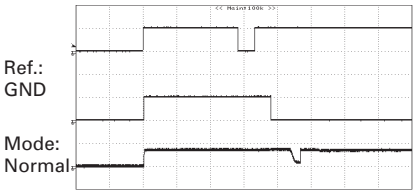 	① DSCSNS 5 V/div 500 ms/div ② 8SNS 5 V/div ③ 12SNS 5 V/div 8 cm CD Loading operation 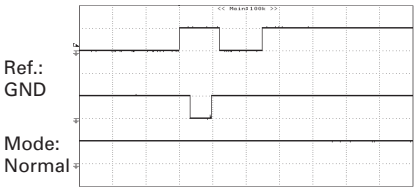
⑥ SIN 1 V/div 1 s/div ⑦ CIN 500 mV/div ⑧ TIN 500 mV/div 12 cm CD-DA setup operation after loading 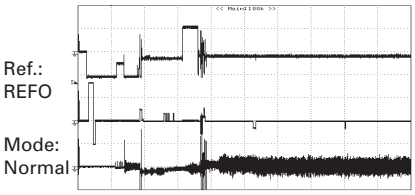 	⑥ SIN 1 V/div 1 s/div ⑦ CIN 500 mV/div ⑧ TIN 500 mV/div 12 cm CD-ROM(1 session) setup operation after loading 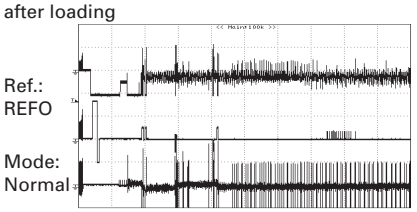 	⑥ SIN 1 V/div 1 s/div ⑦ CIN 500 mV/div ⑧ TIN 500 mV/div 12 cm CD-ROM(3 sessions) setup operation after loading 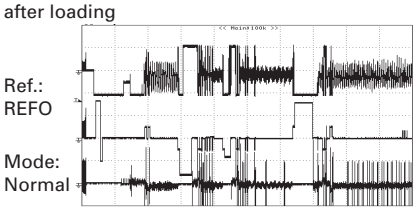
⑨ FIN 200 mV/div 500 ms/div ⑩ RFOK 2 V/div ⑥ SIN 2 V/div 12 cm CD-DA Source On setup operation 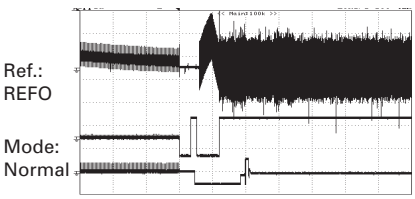 	⑪ TE 500 mV/div 200 ms/div ⑫ FE 500 mV/div Source On setup operation 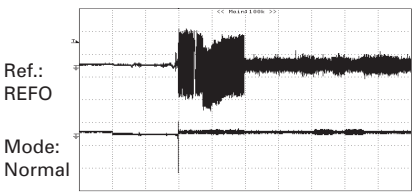 	⑫ FE 500 mV/div 20 ms/div ⑨ FIN 500 mV/div ⑪ TE 500 mV/div ⑧ TIN 500 mV/div CD-DA Play operation 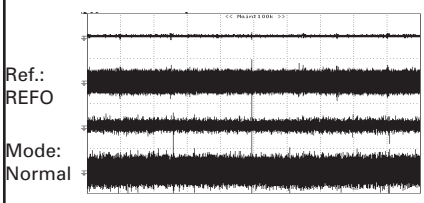
⑫ FE 500 mV/div 20 ms/div ⑨ FIN 500 mV/div ⑪ TE 500 mV/div ⑧ TIN 500 mV/div CD-ROM play operation(Regular track Jump) 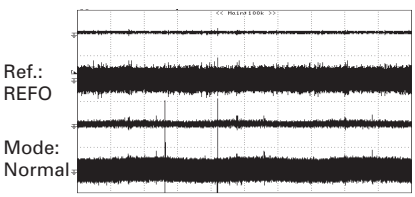 	⑬ MDX 2 V/div 50 ms/div ⑥ SIN 200 mV/div Spindle waveform during play operation 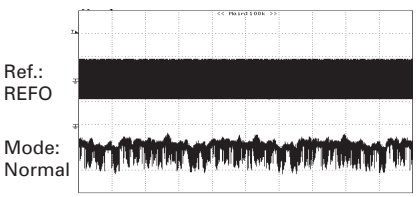 	⑬ MDX 2 V/div 5 µs/div ⑥ SIN 500 mV/div Spindle waveform during play operation (Wider)

⑨ FIN 500 mV/div 200 ms/div ⑫ FE 500 mV/div Focus Search waveform Ref.: REFO Mode: TEST	⑪ TE 500 mV/div 2 ms/div ⑭ RFAGC 500 mV/div Track Open waveform Ref.: REFO Mode: TEST	⑭ RFAGC 1 V/div 500 µs/div ⑪ TE 500 mV/div ⑧ TIN 500 mV/div 1 Track Jump waveform Ref.: REFO Mode: TEST
⑭ RFAGC 1 V/div 500 µs/div ⑪ TE 500 mV/div ⑧ TIN 500 mV/div 4 Tracks Jump waveform Ref.: REFO Mode: TEST	⑭ RFAGC 1 V/div 1 ms/div ⑪ TE 500 mV/div ⑧ TIN 500 mV/div 10 Tracks Jump waveform Ref.: REFO Mode: TEST	⑭ RFAGC 1 V/div 2 ms/div ⑪ TE 500 mV/div ⑧ TIN 500 mV/div 32 Tracks Jump waveform Ref.: REFO Mode: TEST
⑭ RFAGC 1 V/div 200 ms/div ⑪ TE 1 V/div ⑦ CIN 500 mV/div ⑥ SIN 2 V/div Search operation(Outter to Inner) Ref.: REFO Mode: Normal	⑮ LOUT 1 V/div 200 µs/div ⑯ ROUT 1 V/div Analog audio waveform Ref.: AGND Mode: Normal	① DSCSNS 5 V/div 500 ms/div ② 8SNS 5 V/div ③ 12SNS 5 V/div 12 cm CD Eject operation Ref.: GND Mode: Normal
① DSCSNS 5 V/div 500 ms/div ⑤ CLCONT 5 V/div ④ LOEJ 5 V/div 12 cm CD Eject operation Ref.: GND Mode: Normal	① DSCSNS 5 V/div 500 ms/div ② 8SNS 5 V/div ③ 12SNS 5 V/div 8 cm CD Eject operation Ref.: GND Mode: Normal	⑥ SIN 1 V/div 500 ms/div ⑦ CIN 500 mV/div ⑧ TIN 500 mV/div CD-DA → CD-ROM mode change(Band key) Ref.: REFO Mode: Normal

⑥ SIN 1 V/div 500 ms/div ⑦ CIN 500 mV/div ⑧ TIN 500 mV/div CD-ROM → CD-DA mode change(Band key) Ref.: REFO Mode: Normal 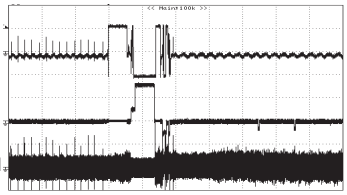	⑭ RFAGC 1 V/div 500 µs/div ⑧ TIN 1 V/div ⑪ TE 1 V/div ⑨ FIN 1 V/div Black dot(800 µm) during play Ref.: REFO Mode: Normal 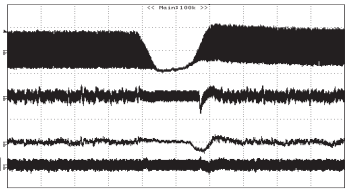	

A

B

C

D

E

F

3.5 BLUETOOTH UNIT, ANTENNA UNIT

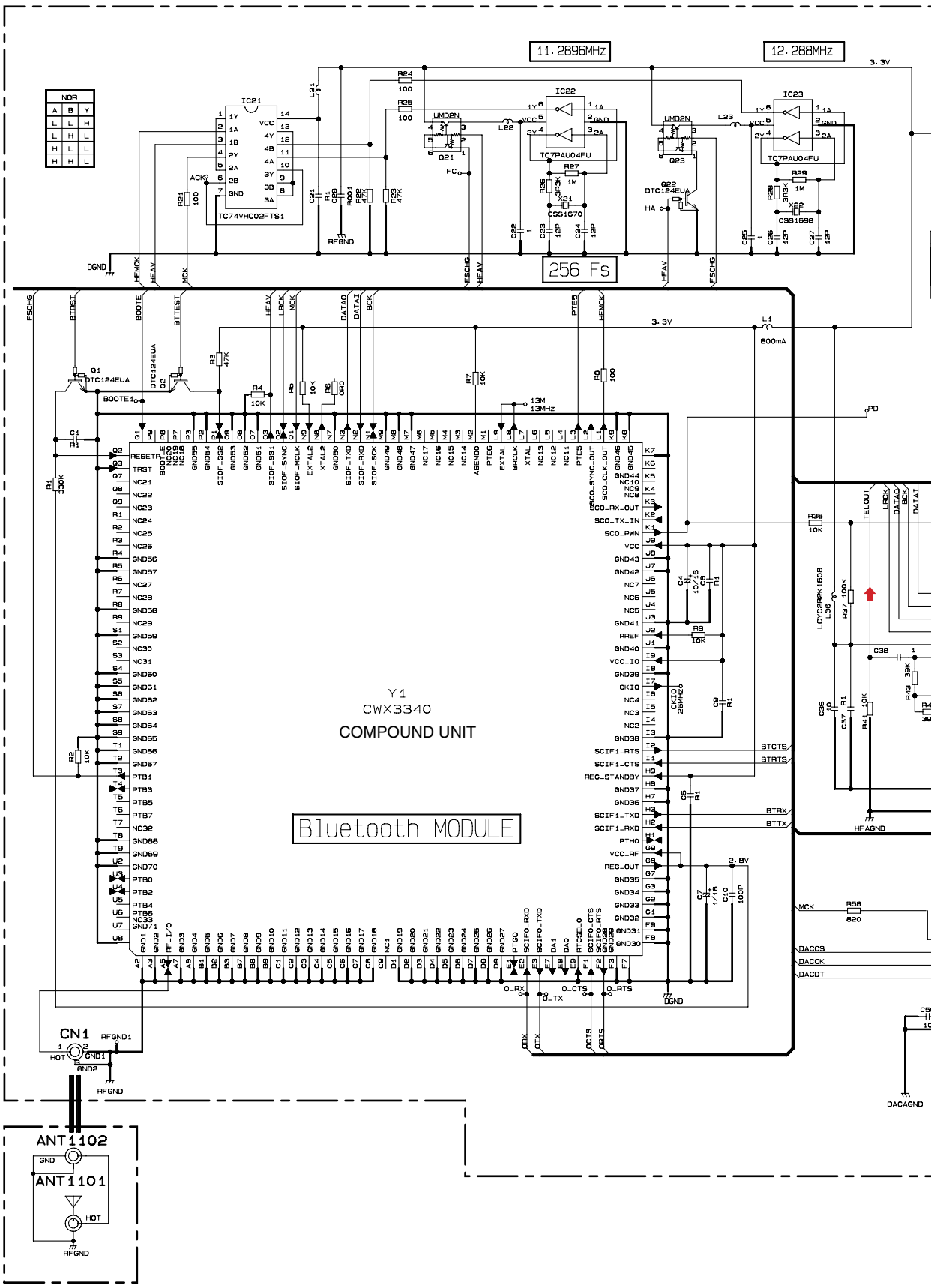

F ANTENNA UNIT

E BLUETOOTH UNIT

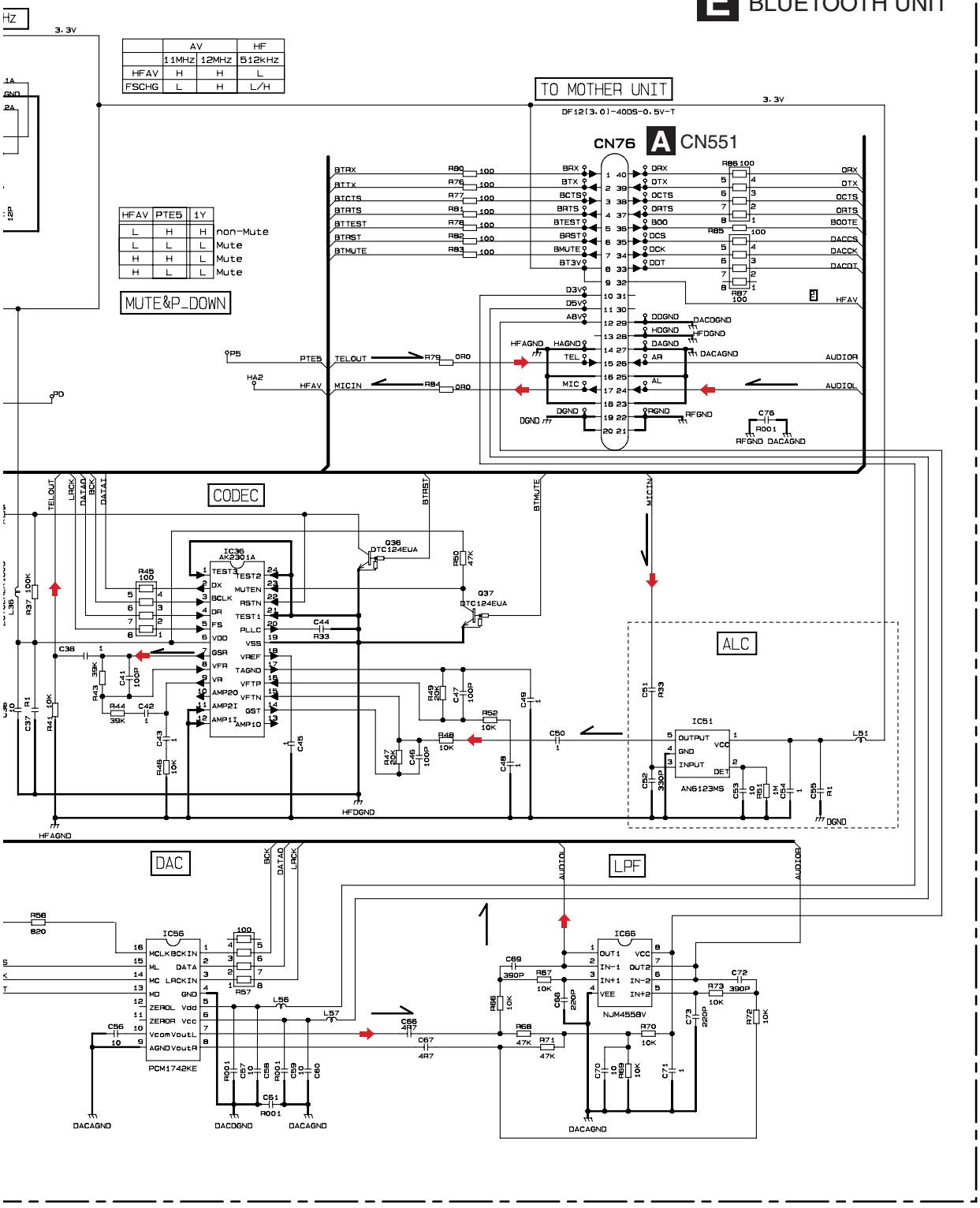

4. PCB CONNECTION DIAGRAM
4.1 TUNER AMP UNIT

NOTE FOR PCB DIAGRAMS

1. The parts mounted on this PCB include all necessary parts for several destination. For further information for respective destinations, be sure to check with the schematic diagram.
2. Viewpoint of PCB diagrams

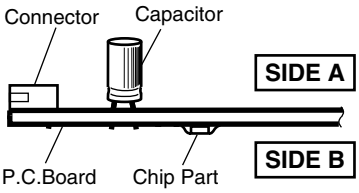

⚠FU 301 (A,144,120)Fuse 3 A CEK1286
⚠FU 302 (A,66,106)Fuse 3 A CEK1286

A TUNER AMP UNIT

CORD ASSY(POW

M891 FAN MOTOR

WIRED REMOTE CONTROL INPUT

CN151

IP-BUS

CN101

AUX INPUT

CN181

CN981

CN891

CORD ASSY (REAR OUTPUT)

CN302

CORD ASSY (MICROPHONE INPUT)

CN552

CN553

E CN76

RD ASSY(POWER SUPPLY,SPEAKER)

SIDE A

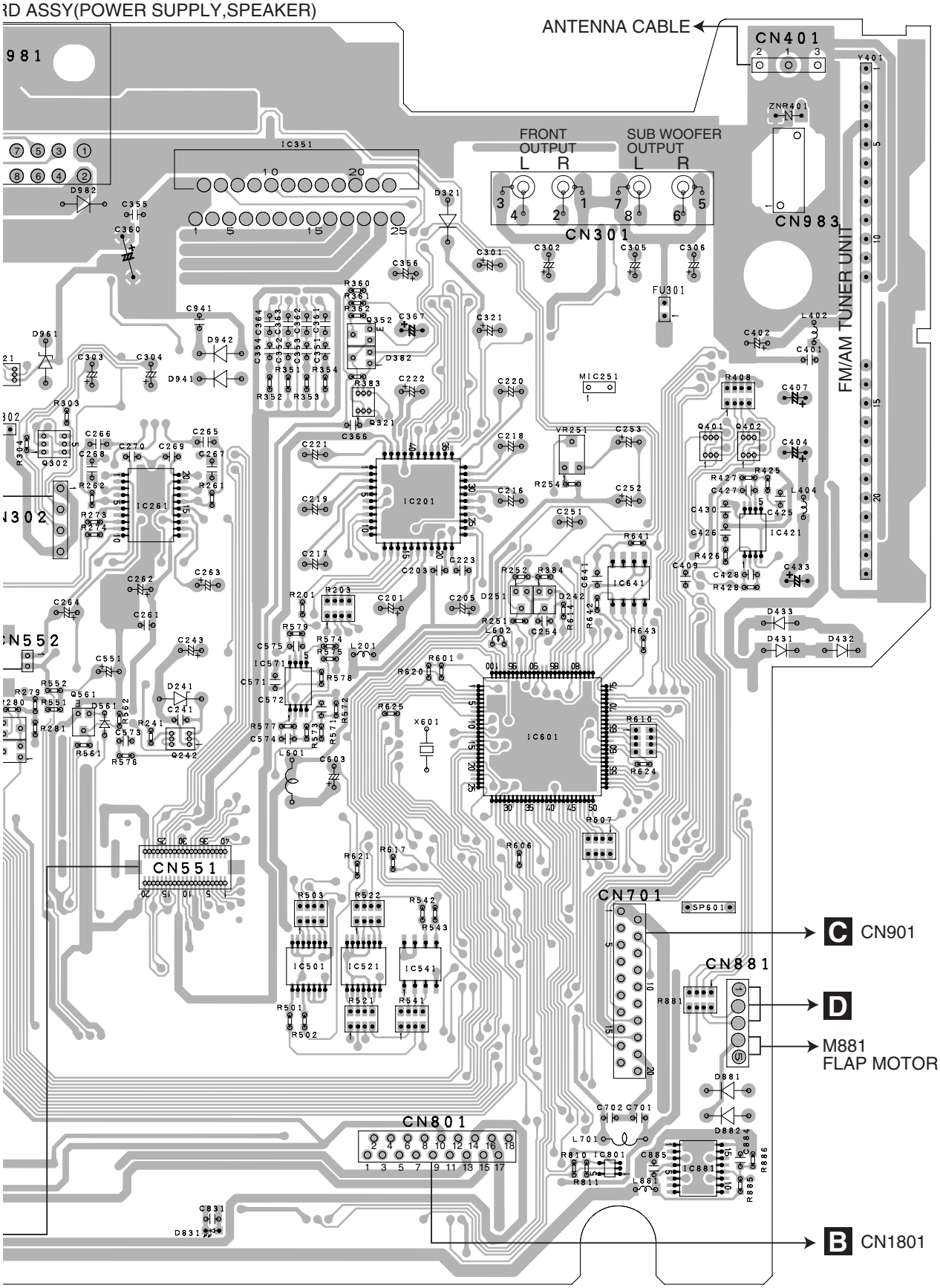

A TUNER AMP UNIT

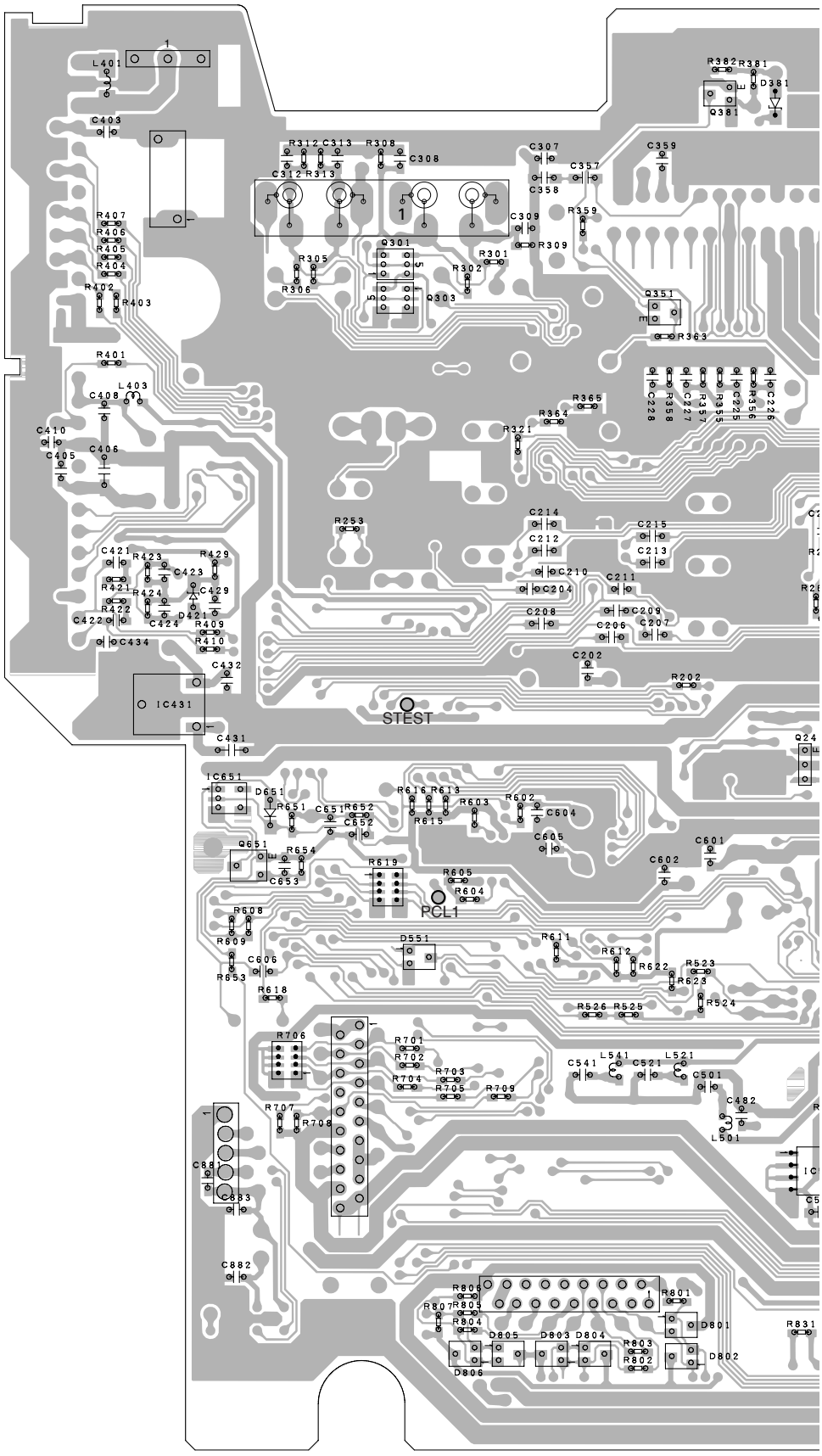

SIDE B

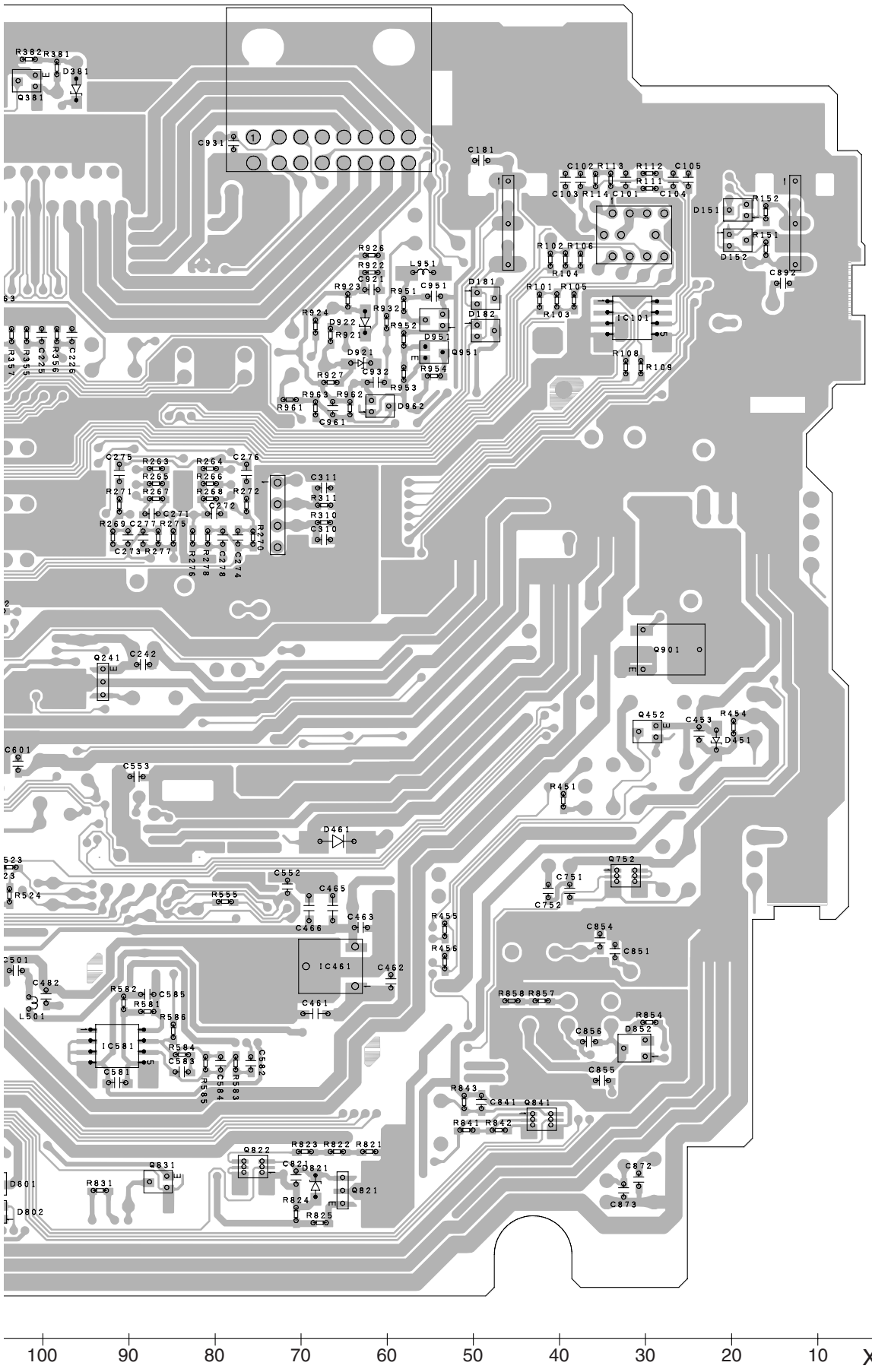

R382 R381 D381 Q381
C931
C181
C102 R113 R112 C105 R111 C103 R114 C101 C104
D151 R152 R151 D152 C892
R926 R922 C921 L951 R923 R951 C951 D181 D182 R924 D922 R921 R932 R952 D951 Q951 D921 R954 R927 C932 R953 R963 R962 R961 C961 D962
R102 R106 R104 R101 R105 R103 IC101 R108 R109
R357 R355 C225 R356 C226
C275 R263 R264 C276 R265 R266 R271 R267 R268 R272 C272 C271 R269 C277 R275 C273 R277 R276 R278 C278 C274 R270 C311 R311 R310 C310
Q241 C242
Q901
Q452 C453 R454 D451
C601 C553 R451
D461
Q752 C751 C752
R524 C552 C465 R555 C466 C463 R455 R456 C854 C851
IC461 C462 C501 C482 L501 R582 C585 R581 R586 C461 R858 R857 R854 D852 C856 C855
IC581 R584 C583 C581 R585 C584 R583 C582
R843 C841 Q841 R841 R842
Q822 R823 R822 R821 C821 D821 Q821 R824 R825 Q831 R831 D801 D802 C872 C873
150 140 130 120 110 100 90 80 70 60 50 40 30 20 10 0
Y
100 90 80 70 60 50 40 30 20 10 X

A

4.2 KEYBOARD UNIT

B KEYBOARD UNIT

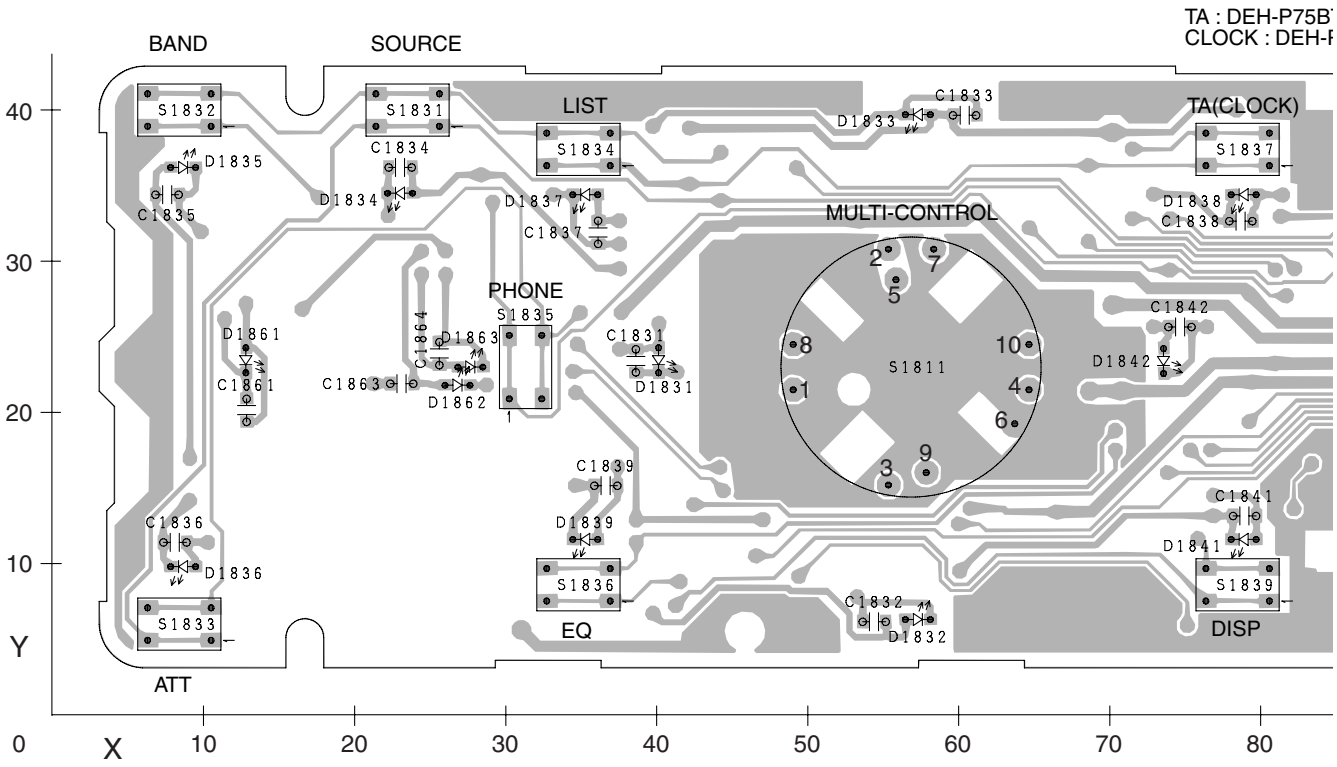

B KEYBOARD UNIT

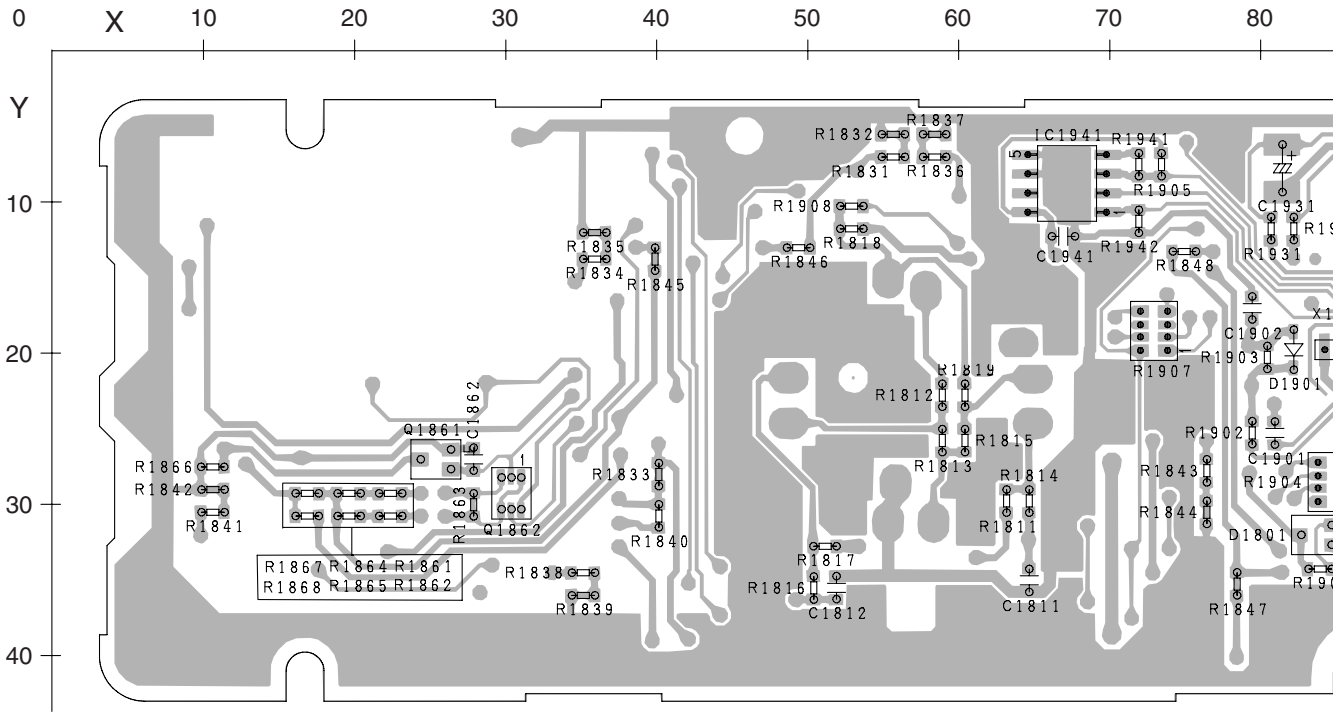

SIDE A

TA : DEH-P75BT/XN/EW5
CLOCK : DEH-P7850BT/XN/ES

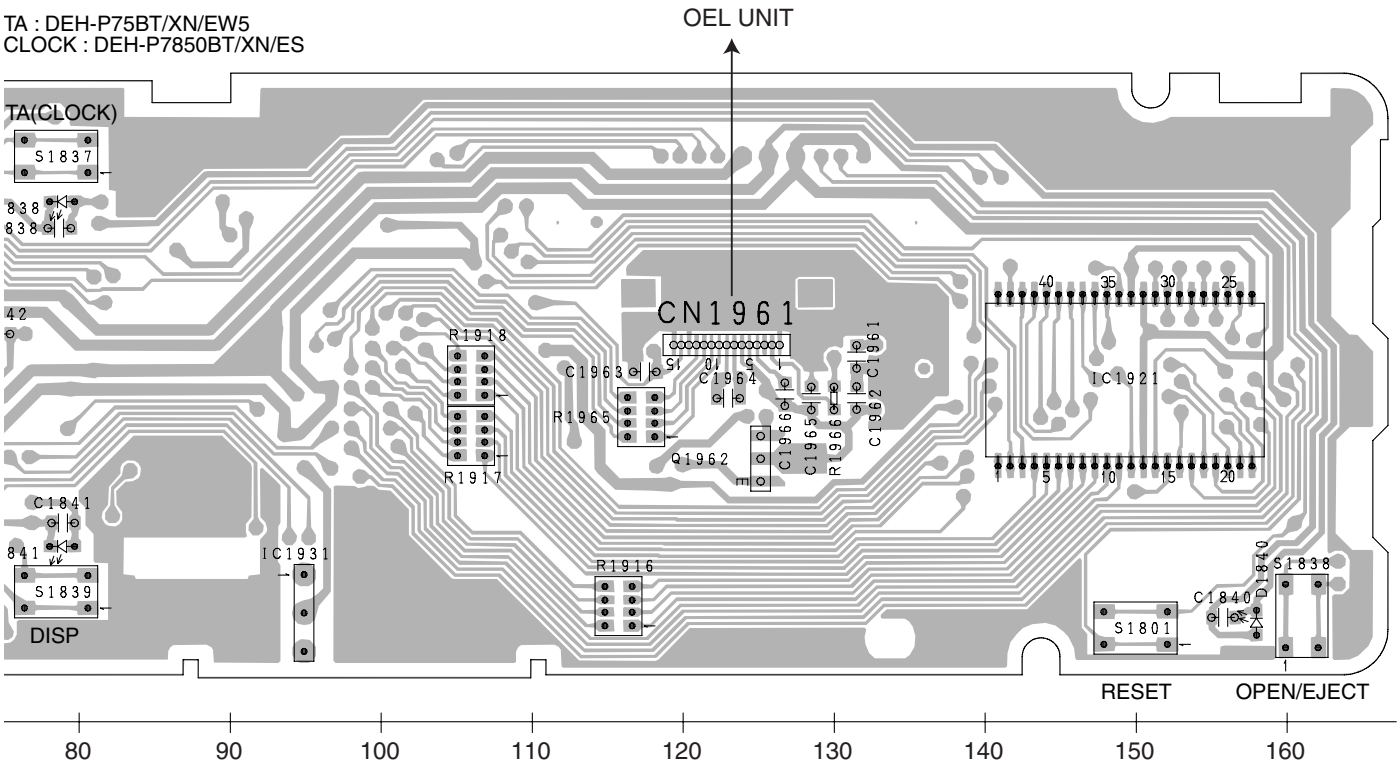

SIDE B

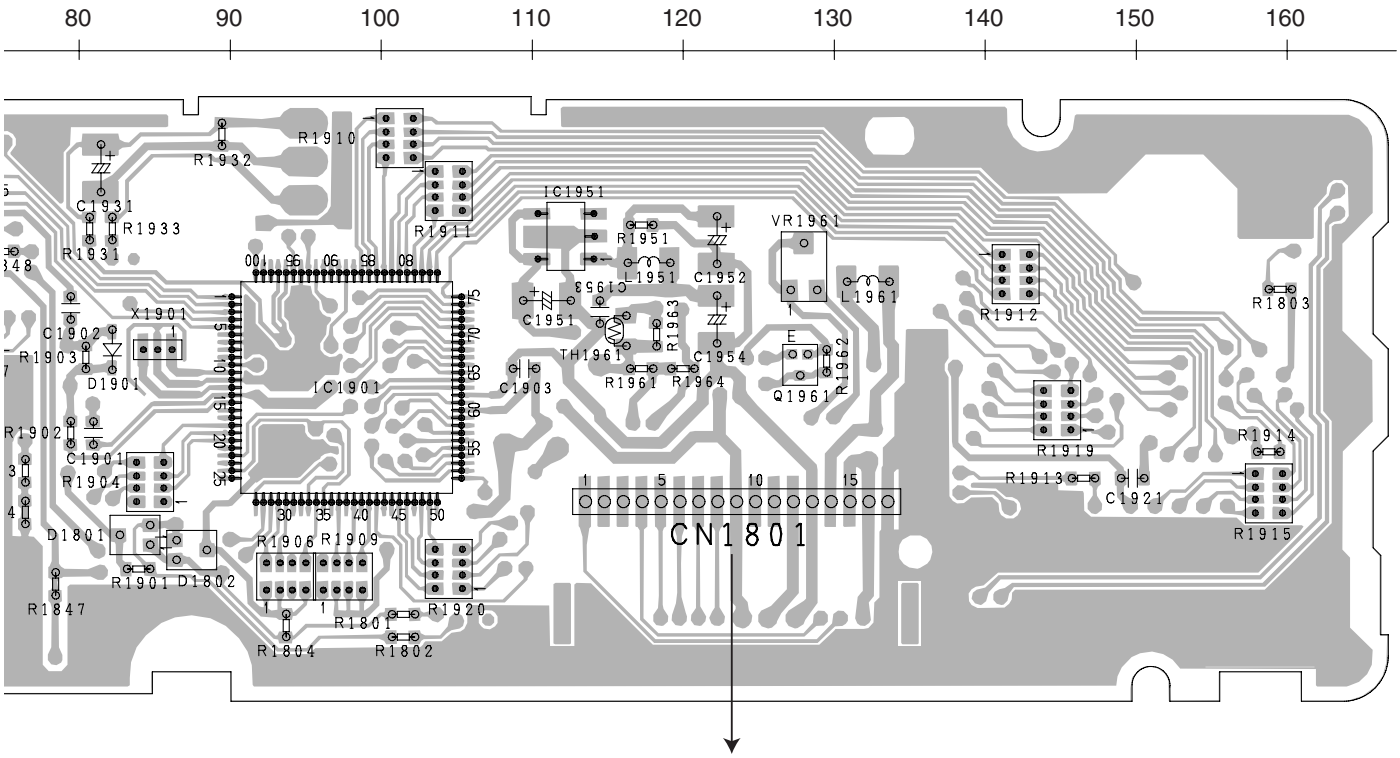

4.3 CD CORE UNIT(S10.5COMP1)

C CD CORE UNIT(S10.5COMP1)

SIDE A

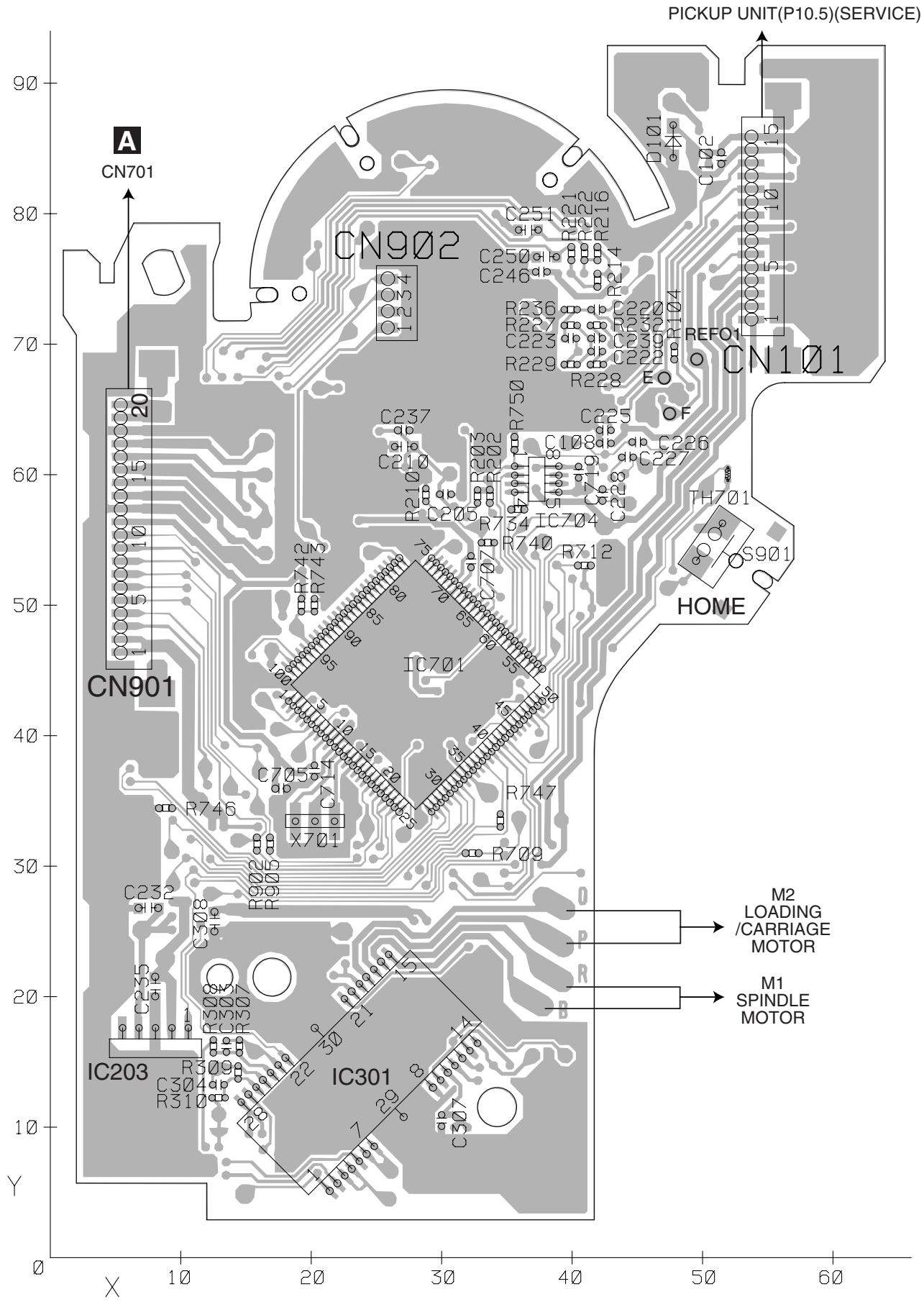

C

C CD CORE UNIT(S10.5COMP1)

SIDE B

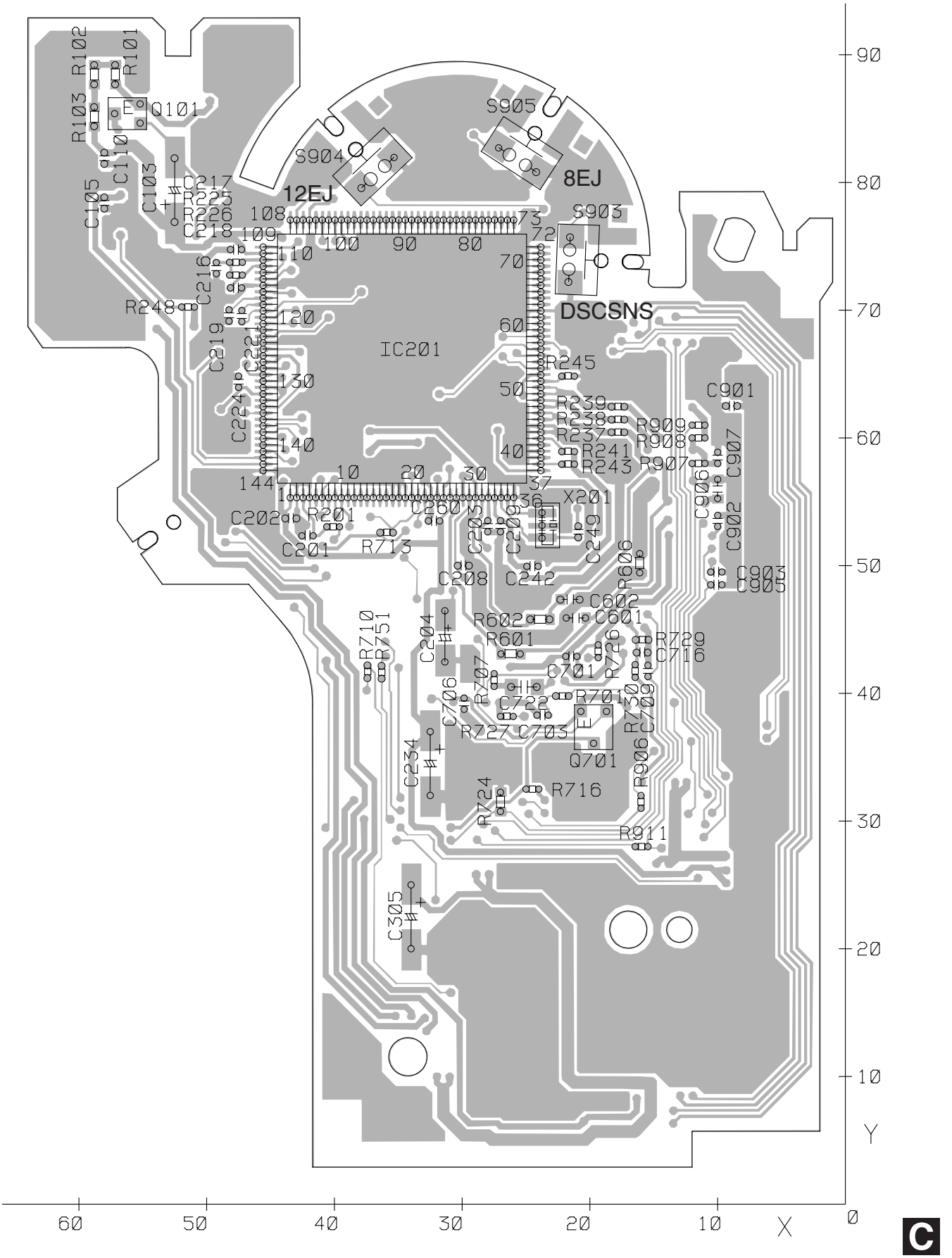

4.4 BLUETOOTH UNIT

E BLUETOOTH UNIT

SIDE A

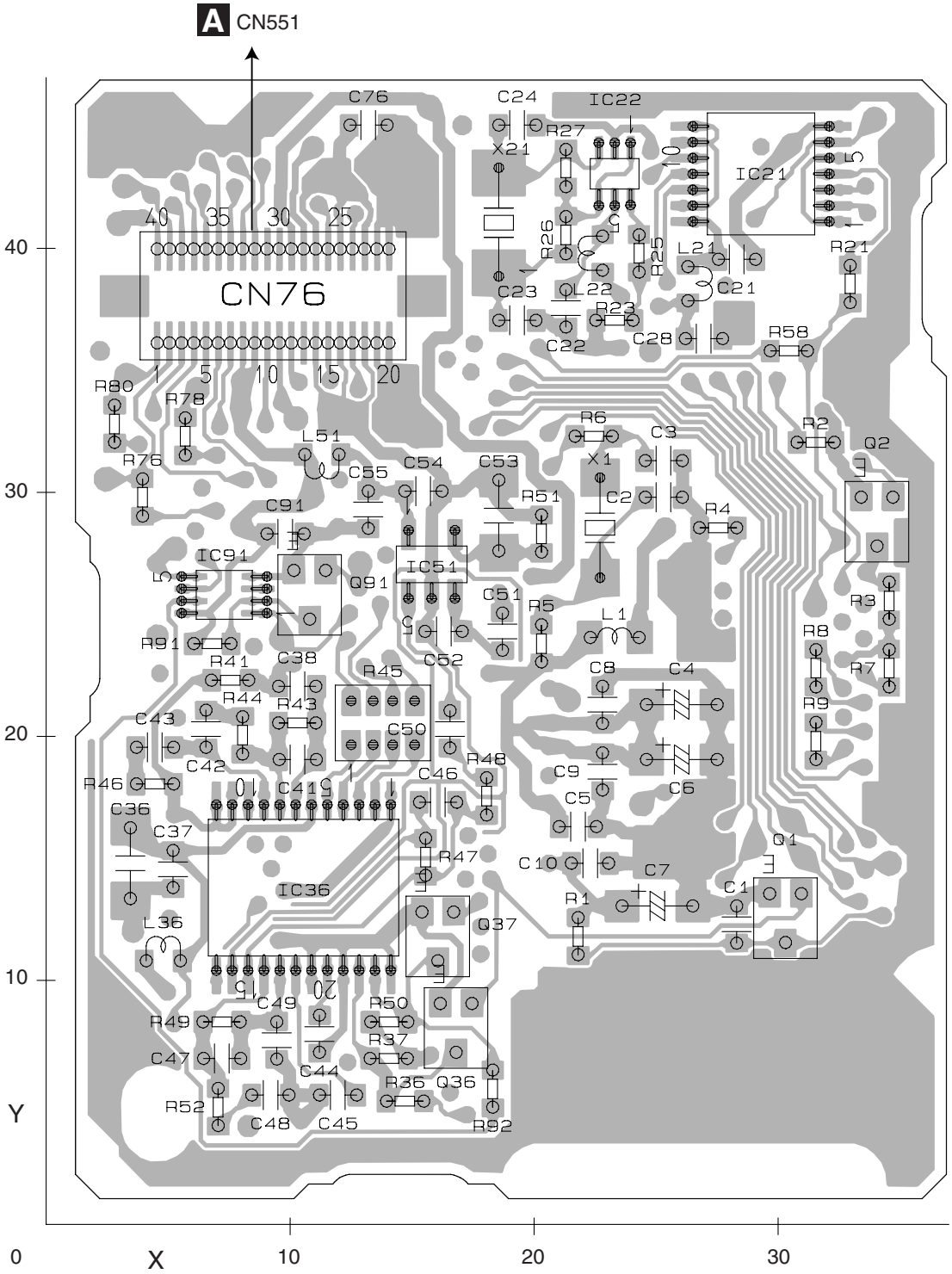

E

E BLUETOOTH UNIT

SIDE B

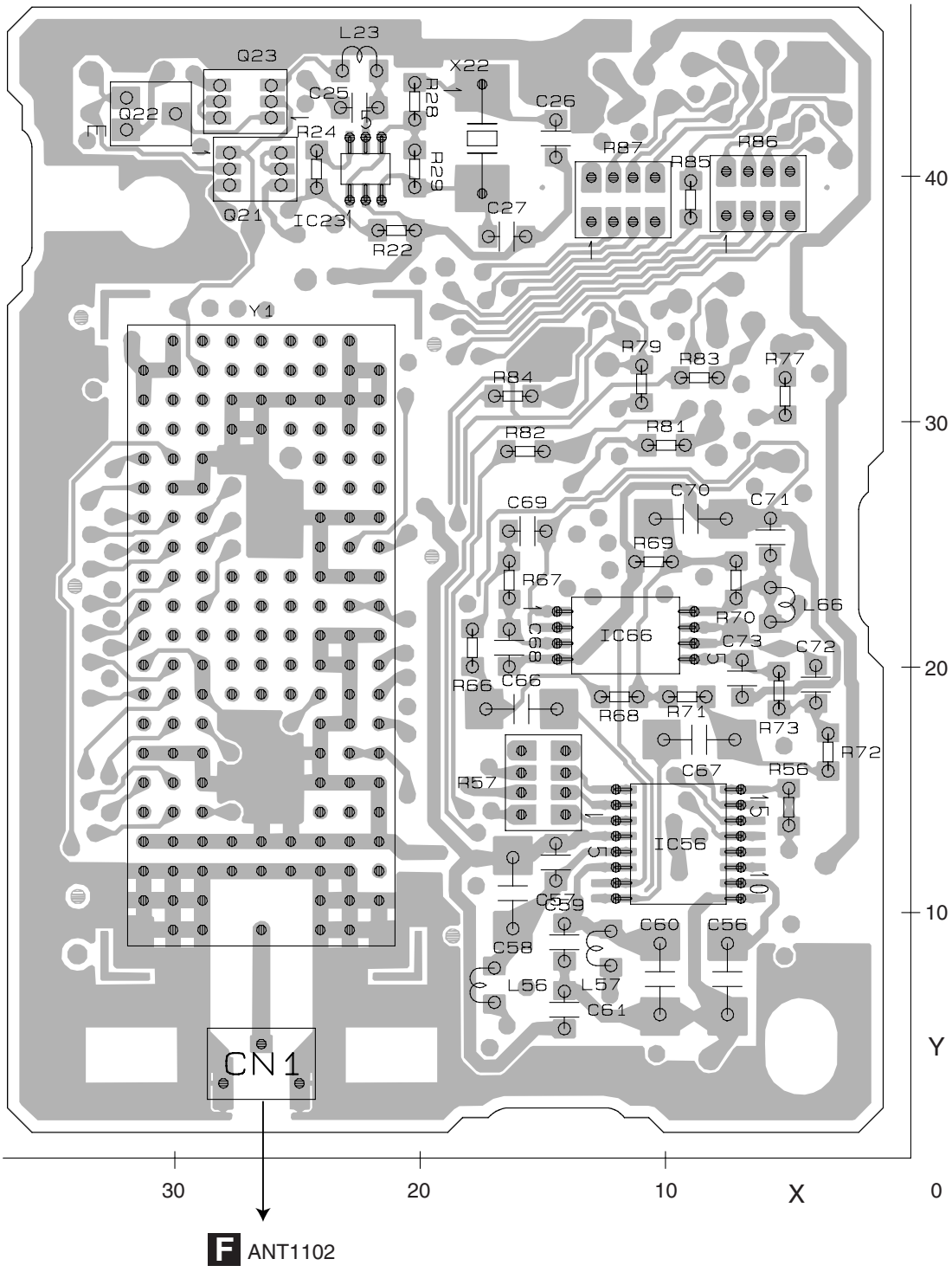

F ANT1102

4.5 ANTENNA UNIT

F ANTENNA UNIT

SIDE A

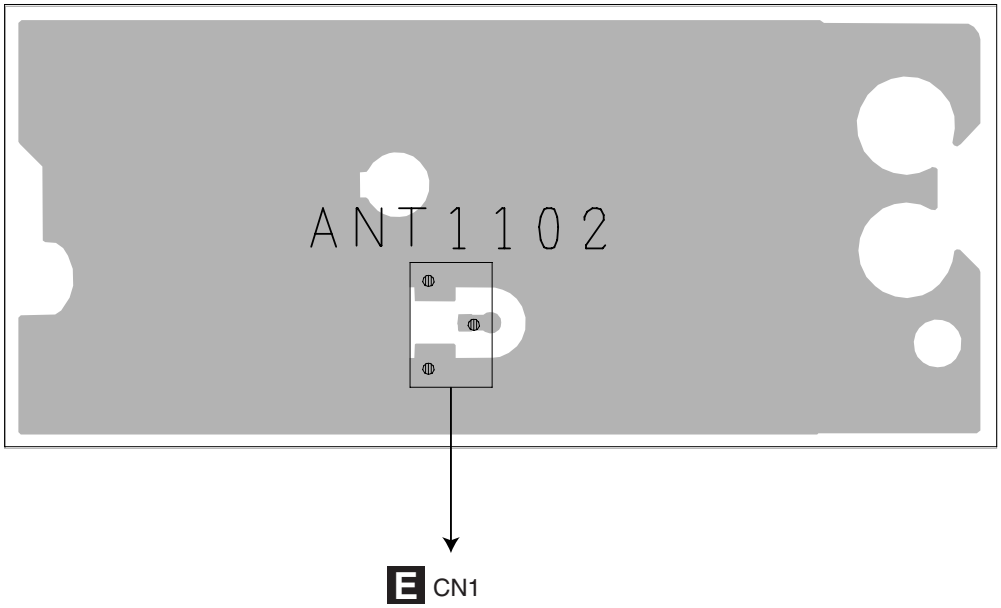

F ANTENNA UNIT

SIDE B

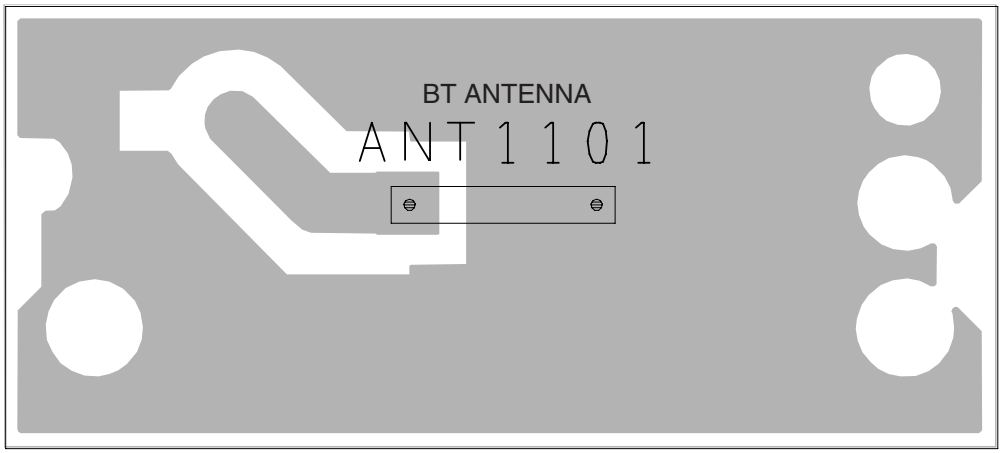

F

4.6 SWITCH UNIT

D SWITCH UNIT

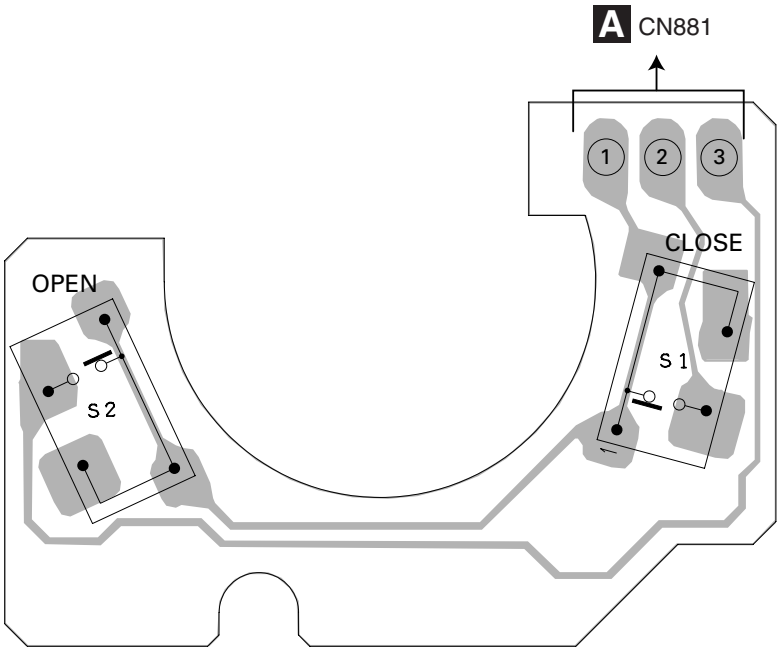

5. ELECTRICAL PARTS LIST

NOTE:

- *Parts whose parts numbers are omitted are subject to being not supplied.*
- *The part numbers shown below indicate chip components.*

  Chip Resistor

  RS1/◯S◯◯◯J,RS1/◯◯S◯◯◯J

  Chip Capacitor (except for CQS.....)

  CKS....., CCS....., CSZS.....
- *The ⚠ mark found on some component parts indicates the importance of the safety factor of the part. Therefore, when replacing, be sure to use parts of identical designation.*
- *Meaning of the figures and others in the parentheses in the parts list.*

  Example) IC 301 is on the point (face A, 91 of x-axis, and 111 of y-axis) of the corresponding PC board.

  IC 301 (A, 91, 111) IC NJM2068V

Circuit Symbol and No. **Part No.**

Unit Number : CWN1771
Unit Name : Bluetooth Unit
Unit Number : CWN1425(DEH-P75BT/XN/EW5)
Unit Name : Tuner Amp Unit
Unit Number : CWN1426(DEH-P7850BT/XN/ES)
Unit Name : Tuner Amp Unit
Unit Number :
Unit Name : Keyboard Unit
Unit Number : CWS1389
Unit Name : Switch Unit
Unit Number : CWX3410
Unit Name : CD Core Unit(S10.5COMP1)

E

Unit Number : CWN1771
Unit Name : Bluetooth Unit

MISCELLANEOUS

IC 21	(A,29,43)	IC	TC74VHC02FTS1
IC 22	(A,23,43)	IC	TC7PAU04FU
IC 23	(B,22,40)	IC	TC7PAU04FU
IC 36	(A,11,14)	IC	AK2301A
IC 51	(A,16,27)	IC	AN6123MS
IC 56	(B,10,13)	IC	PCM1742KE
IC 66	(B,12,21)	IC	NJM4558V
Q 1	(A,30,13)	Transistor	DTC124EUA
Q 2	(A,34,29)	Transistor	DTC124EUA
Q 21	(B,27,40)	Transistor	UMD2N
Q 22	(B,31,43)	Transistor	DTC124EUA
Q 23	(B,27,43)	Transistor	UMD2N
Q 36	(A,17,8)	Transistor	DTC124EUA
Q 37	(A,16,12)	Transistor	DTC124EUA
L 1	(A,23,24)	Inductor	CTF1394

Circuit Symbol and No. **Part No.**

L 21	(A,26,39) Inductor	CTF1379
L 22	(A,23,40) Inductor	CTF1379
L 23	(B,23,44) Inductor	CTF1379
L 36	(A,5,11) Inductor	LCYC2R2K1608
L 51	(A,11,32) Inductor	CTF1379
L 56	(B,17,7) Inductor	CTF1379
L 57	(B,12,9) Inductor	CTF1379
X 21	(A,19,41) Resonator 11.289 6 MHz	CSS1670
X 22	(B,18,42) Resonator 12.288 MHz	CSS1698
Y 1	(B,27,21) Compound Unit	CWX3340

RESISTORS

R 1	(A,22,12)	RS1/16S334J
R 2	(A,32,32)	RS1/16S103J
R 3	(A,35,26)	RS1/16S473J
R 4	(A,28,29)	RS1/16S103J
R 5	(A,20,24)	RS1/16S103J
R 6	(A,22,32)	RS1/16S0R0J
R 7	(A,35,23)	RS1/16S103J
R 8	(A,32,23)	RS1/16S101J
R 9	(A,32,20)	RS1/16S103J
R 21	(A,33,39)	RS1/16S101J
R 22	(B,21,38)	RS1/16S473J
R 23	(A,23,37)	RS1/16S473J
R 24	(B,24,40)	RS1/16S101J
R 25	(A,24,40)	RS1/16S101J
R 26	(A,21,41)	RS1/16S332J
R 27	(A,21,43)	RS1/16S105J
R 28	(B,20,43)	RS1/16S332J
R 29	(B,20,40)	RS1/16S105J
R 36	(A,15,5)	RS1/16S103J
R 37	(A,14,7)	RS1/16S104J
R 41	(A,8,22)	RS1/16S103J
R 43	(A,10,21)	RS1/16S393J
R 44	(A,8,20)	RS1/16S393J
R 45	(A,14,21)	RAB4C101J
R 46	(A,4,18)	RS1/16S103J
R 47	(A,16,15)	RS1/16S203J
R 48	(A,18,18)	RS1/16S103J
R 49	(A,7,8)	RS1/16S203J
R 50	(A,14,8)	RS1/16S473J

Circuit Symbol and No.		Part No.
R 51	(A,20,28)	RS1/16S105J
R 52	(A,7,5)	RS1/16S103J
R 57	(B,15,15)	RAB4C101J
R 58	(A,30,36)	RS1/16S821J
R 66	(B,18,21)	RS1/16S103J
R 67	(B,16,24)	RS1/16S103J
R 68	(B,12,19)	RS1/16S473J
R 69	(B,11,24)	RS1/16S103J
R 70	(B,7,24)	RS1/16S103J
R 71	(B,9,19)	RS1/16S473J
R 72	(B,3,17)	RS1/16S103J
R 73	(B,5,19)	RS1/16S103J
R 76	(A,4,30)	RS1/16S101J
R 77	(B,5,31)	RS1/16S101J
R 78	(A,6,32)	RS1/16S101J
R 79	(B,11,32)	RS1/16S0R0J
R 80	(A,3,33)	RS1/16S101J
R 81	(B,10,29)	RS1/16S101J
R 82	(B,16,29)	RS1/16S101J
R 83	(B,9,32)	RS1/16S101J
R 84	(B,16,31)	RS1/16S0R0J
R 85	(B,9,39)	RS1/16S101J
R 86	(B,6,39)	RAB4C101J
R 87	(B,12,39)	RAB4C101J

CAPACITORS

C 1	(A,28,12)	CKSRYB104K16
C 4	(A,26,21)	CSZS100M16
C 5	(A,22,16)	CKSRYB104K16
C 7	(A,25,13)	CSZS1R0M16
C 8	(A,23,21)	CKSRYB104K16
C 9	(A,23,19)	CKSRYB104K16
C 10	(A,22,15)	CCSRCH101J50
C 21	(A,28,40)	CKSRYB104K16
C 22	(A,21,38)	CKSRYB105K10
C 23	(A,19,37)	CCSRCH120J50
C 24	(A,19,45)	CCSRCH120J50
C 25	(B,23,43)	CKSRYB105K10
C 26	(B,15,42)	CCSRCH120J50
C 27	(B,17,38)	CCSRCH120J50
C 28	(A,27,36)	CKSRYB102K50
C 36	(A,3,15)	CKSYB106K6R3
C 37	(A,5,15)	CKSRYB104K16
C 38	(A,10,22)	CKSRYB105K10
C 41	(A,10,19)	CCSRCH101J50
C 42	(A,7,20)	CKSRYB105K10
C 43	(A,4,20)	CKSRYB105K10
C 44	(A,11,8)	CKSRYB334K10
C 45	(A,12,5)	CKSRYB105K10
C 46	(A,16,17)	CCSRCH101J50
C 47	(A,7,7)	CCSRCH101J50
C 48	(A,9,5)	CKSRYB105K10
C 49	(A,9,8)	CKSRYB105K10
C 50	(A,17,20)	CKSRYB105K10
C 51	(A,19,24)	CKSRYB334K10
C 52	(A,16,24)	CCSRCH331J50
C 53	(A,19,29)	CKSYB106K6R3
C 54	(A,15,30)	CKSRYB105K10
C 55	(A,13,29)	CKSRYB104K16

Circuit Symbol and No.		Part No.
C 56	(B,8,7)	CKSYB106K6R3
C 57	(B,15,12)	CKSRYB102K50
C 58	(B,16,11)	CKSYB106K6R3
C 59	(B,14,9)	CKSRYB102K50
C 60	(B,10,7)	CKSYB106K6R3
C 61	(B,14,6)	CKSRYB102K50
C 66	(B,16,18)	CKSYB475K16
C 67	(B,9,17)	CKSYB475K16
C 68	(B,16,21)	CCSRCH221J50
C 69	(B,16,26)	CCSRCH391J50
C 70	(B,9,26)	CKSYB106K6R3
C 71	(B,6,25)	CKSRYB105K10
C 72	(B,4,19)	CCSRCH391J50
C 73	(B,7,20)	CCSRCH221J50
C 76	(A,13,45)	CKSRYB102K50

A

Unit Number : CWN1425(DEH-P75BT/XN/EW5)
Unit Name : Tuner Amp Unit

MISCELLANEOUS

IC 101	(B,32,118) IC	HA12241FP
IC 201	(A,115,98) IC	PML016B
IC 261	(A,84,97) IC	BA3131FS
IC 351	(A,101,137) IC	PAL007B
IC 431	(B,161,82) IC	NJM2391DL1-33
IC 461	(B,68,43) IC	NJM2391DL1-33
IC 501	(A,102,43) IC	TC74VHCT08AFTS1
IC 521	(A,109,43) IC	TC74VHC08FTS1
IC 541	(A,116,43) IC	S99-50084
IC 571	(A,101,76) IC	NJM4558V
IC 581	(B,91,34) IC	NJM4558MD
IC 601	(A,130,70) IC	PEG262A
IC 651	(B,153,73) IC	BD4835G
IC 851	(A,33,30) IC	NJM2360M
IC 881	(A,149,19) IC	BA6288FS
IC 911	(A,11,97) IC	NJM2388F84
Q 101	(A,30,122) Transistor	UMF23N
Q 241	(B,95,76) Transistor	2SD1767
Q 242	(A,87,70) Transistor	UMD2N
Q 261	(A,67,71) Transistor	DTC124EUA
Q 301	(B,136,128) Transistor	IMH23
Q 302	(A,72,105) Transistor	IMH23
Q 303	(B,136,125) Transistor	IMH23
Q 321	(A,109,110) Transistor	UMD2N
Q 351	(B,108,123) Transistor	DTC114EU
Q 352	(A,109,118) Transistor	DTC124EUA
Q 381	(B,102,146) Transistor	2SC4081
Q 401	(A,150,104) Transistor	UMH1N
Q 402	(A,155,104) Transistor	UMH1N
Q 451	(A,37,64) Transistor	2SB1243
Q 452	(B,30,70) Transistor	DTC114EU
Q 453	(A,17,72) Transistor	2SD2396
Q 561	(A,76,72) Transistor	DTC314TU
Q 651	(B,151,66) Transistor	2SC3052-12
Q 751	(A,17,56) Transistor	2SD2396
Q 752	(B,32,54) Transistor	UMD2N
Q 821	(B,63,17) Transistor	2SD1767
Q 822	(B,76,20) Transistor	UMD2N

Circuit Symbol and No.		Part No.
Q 831	(B,87,18) Transistor	DTC114EU
Q 841	(B,42,25) Transistor	UMF23N
Q 851	(A,24,44) Transistor	2SD1760F5
Q 852	(A,28,39) Transistor	UMD2N
Q 871	(A,45,20) Transistor	2SD1760F5
Q 872	(A,33,22) Transistor	UMD2N
Q 891	(A,18,113) Transistor	2SD1767
Q 892	(A,9,113) Transistor	UMD2N
Q 901	(B,26,80) Transistor	2SD1760F5
Q 902	(A,42,93) Transistor	UMD3N
Q 921	(A,66,113) Transistor	UMX1N
Q 931	(A,60,111) Transistor	RT1N141C-12
Q 951	(B,55,114) Transistor	2SA1576
D 151	(B,19,131) Diode	DAN202U
D 152	(B,19,127) Diode	DAP202U
D 181	(B,49,121) Diode	DAP202U
D 182	(B,49,117) Diode	DAN202U
D 241	(A,87,74) Diode	HZS12L(B1)
D 242	(A,130,86) Diode Network	DA204U
D 251	(A,128,86) Diode Network	DA204U
D 261	(A,67,68) Diode	DAN202U
D 321	(A,119,131) Diode	1SS133
D 381	(B,96,145) Diode	HZU8R2(B3)
D 382	(A,109,115) Diode	DAN202U
D 431	(A,158,80) Diode	1SR154-400
D 432	(A,166,80) Diode	1SR154-400
D 433	(A,158,83) Diode	1SR154-400
D 451	(B,22,69) Diode	UDZS5R6(B)
D 452	(A,19,64) Diode	DAN202U
D 461	(B,66,58) Diode	1SR154-400
D 551	(B,133,56) Diode	DAN202U
D 561	(A,78,71) Diode	1SS355
D 651	(B,149,71) Diode	1SS355
D 751	(A,25,55) Diode	HZS7L(C3)
D 801	(B,106,18) Diode	DAP202U
D 802	(B,106,15) Diode	DAN202U
D 803	(B,119,15) Diode	DAP202U
D 804	(B,115,15) Diode	DAN202U
D 805	(B,124,15) Diode	DAP202U
D 806	(B,128,15) Diode	DAN202U
D 821	(B,68,18) Diode	HZU10(B1)
D 831	(A,91,11) LED	SML412BC5T(MN)
D 851	(A,32,45) Diode	HZS11L(A1)
D 852	(B,31,34) Diode	RB411D
D 871	(A,29,18) Diode	HZS7L(B3)
D 881	(A,152,28) Diode	1SS133
D 882	(A,152,25) Diode	1SS133
D 891	(A,13,112) Diode	UDZS12(B)
D 901	(A,34,105) Diode	MPG06G-6415G50
D 902	(A,28,91) Diode	UDZS5R6(B)
D 921	(B,63,113) Diode	UDZS7R5(B)
D 922	(B,63,118) Diode	HZU6R8(B2)
D 931	(A,54,127) Diode	MPG06G-6415G50
D 941	(A,92,112) Diode	MPG06G-6415G50
D 942	(A,92,115) Diode	MPG06G-6415G50
D 951	(B,55,118) Diode	DAN202U
D 961	(A,71,114) Diode	HZS7L(C2)
D 962	(B,61,108) Diode Network	DA204U
D 981	(A,54,130) Diode	MPG06G-6415G50
D 982	(A,76,133) Diode	MPG06G-6415G50

Circuit Symbol and No.		Part No.
ZNR401	(A,159,144)Surge Protector	RCCA-201Q31UA-PI
L 101	(A,28,119) Inductor	LCTC1R0K1608
L 201	(A,109,80) Inductor	LCTAW2R2J2520
L 401	(B,166,147) Inductor	LCTAW220J2520
L 402	(A,162,118) Chip Coil	LCTAW1R0J2520
L 403	(B,163,114) Inductor	CTF1379
L 404	(A,161,97) Inductor	LCTAW2R2J2520
L 501	(B,102,39) Inductor	CTF1379
L 521	(B,106,44) Inductor	CTF1379
L 541	(B,112,44) Inductor	CTF1379
L 601	(A,100,65) Ferri-Inductor	LAU100K
L 701	(A,140,22) Ferri-Inductor	LAU100K
L 841	(A,54,25) Ferri-Inductor	LAU100K
L 851	(A,24,31) Inductor	CTF1660
L 852	(A,40,31) Chip Coil	LCTAW4R7J2520
L 881	(A,142,16) Inductor	LCTAW2R2J2520
L 951	(B,56,124) Inductor	LCTAW2R2J2520
X 601	(A,116,68)Crystal Resonator 20.000 MHz	VSS1167
VR251	(A,134,103) Semi-fixed 10 kΩ(B)	CCP1229
⚠FU301	(A,145,121) Fuse 3 A	CEK1286
⚠FU302	(A,66,106) Fuse 3 A	CEK1286
MIC251	(A,137,113) Microphone	CPM1068
SP601	(A,150,50) Buzzer	CPV1062
M 891	Fan Motor	CXM1288
	FM/AM Tuner Unit	CWE1951

RESISTORS

R 101	(B,42,120)	RS1/16S102J
R 102	(B,41,125)	RS1/16S102J
R 103	(B,40,120)	RS1/16S223J
R 104	(B,39,125)	RS1/16S223J
R 105	(B,38,120)	RS1/16S181J
R 106	(B,38,125)	RS1/16S181J
R 107	(A,27,122)	RS1/16S222J
R 108	(B,32,113)	RS1/16S101J
R 109	(B,31,113)	RS1/16S102J
R 111	(B,30,133)	RS1/16S101J
R 112	(B,30,135)	RS1/16S101J
R 113	(B,34,134)	RS1/16S470J
R 114	(B,36,134)	RS1/16S150J
R 115	(A,34,122)	RS1/16S332J
R 116	(A,33,122)	RS1/16S562J
R 151	(B,16,126)	RS1/16S102J
R 152	(B,16,131)	RS1/16S102J
R 201	(A,102,85)	RS1/16S101J
R 202	(B,105,84)	RS1/16S101J
R 203	(A,106,85)	RAB4C102J
R 241	(A,84,70)	RS1/16S182J
R 251	(A,127,84)	RS1/16S104J
R 252	(A,128,89)	RS1/16S104J
R 253	(B,140,101)	RS1/16S222J
R 254	(A,134,100)	RS1/16S561J
R 261	(A,91,98)	RS1/16S103J
R 262	(A,77,98)	RS1/16S103J
R 263	(B,87,101)	RS1/16S473J
R 264	(B,81,101)	RS1/16S473J
R 265	(B,87,99)	RS1/16S473J
R 266	(B,81,99)	RS1/16S473J
R 267	(B,87,97)	RS1/16S103J

Circuit Symbol and No.		Part No.
R 268	(B,81,97)	RS1/16S103J
R 269	(B,92,93)	RS1/16S103J
R 270	(B,76,93)	RS1/16S103J
R 271	(B,91,97)	RS1/16S103J
R 272	(B,76,97)	RS1/16S103J
R 273	(A,77,95)	RS1/16S102J
R 274	(A,77,94)	RS1/16S102J
R 275	(B,85,93)	RS1/16S183J
R 276	(B,83,93)	RS1/16S183J
R 277	(B,87,93)	RS1/16S223J
R 278	(B,81,93)	RS1/16S223J
R 281	(A,70,71)	RS1/16S103J
R 301	(B,125,128)	RS1/16S390J
R 302	(B,128,126)	RS1/16S390J
R 303	(A,74,108)	RS1/16S390J
R 304	(A,69,105)	RS1/16S390J
R 305	(B,144,127)	RS1/16S390J
R 306	(B,146,127)	RS1/16S390J
R 308	(B,137,139)	RS1/16S223J
R 309	(B,122,130)	RS1/16S223J
R 310	(B,67,95)	RS1/16S223J
R 311	(B,67,97)	RS1/16S223J
R 312	(B,145,139)	RS1/16S223J
R 313	(B,143,139)	RS1/16S223J
R 321	(B,123,109)	RS1/16S102J
R 351	(A,100,112)	RS1/16S182J
R 352	(A,98,112)	RS1/16S182J
R 353	(A,102,112)	RS1/16S182J
R 354	(A,104,112)	RS1/16S182J
R 355	(B,102,116)	RS1/16S272J
R 356	(B,98,116)	RS1/16S272J
R 357	(B,104,116)	RS1/16S272J
R 358	(B,107,116)	RS1/16S272J
R 359	(B,116,132)	RS1/16S153J
R 360	(A,108,123)	RS1/16S103J
R 361	(A,108,121)	RS1/16S331J
R 362	(A,108,120)	RS1/16S103J
R 363	(B,108,121)	RS1/16S101J
R 364	(B,119,112)	RS1/16S472J
R 365	(B,116,113)	RS1/16S472J
R 381	(B,98,147)	RS1/16S104J
R 382	(B,102,148)	RS1/16S473J
R 383	(A,108,113)	RS1/16S472J
R 384	(A,130,89)	RS1/16S473J
R 401	(B,165,118)	RS1/16S681J
R 402	(B,166,124)	RS1/16S681J
R 403	(B,165,124)	RS1/16S681J
R 404	(B,165,127)	RS1/16S681J
R 405	(B,165,129)	RS1/16S681J
R 406	(B,165,131)	RS1/16S681J
R 407	(B,165,132)	RS1/16S681J
R 408	(A,153,110)	RAB4C223J
R 409	(B,155,90)	RS1/16S0R0J
R 410	(B,155,88)	RS1/16S0R0J
R 451	(B,40,62)	RS1/16S223J
R 452	(A,34,64)	RD1/4PU152J
R 453	(A,31,64)	RD1/4PU0R0J
R 454	(B,20,71)	RS1/16S472J
R 455	(B,53,47)	RS1/16S0R0J
R 501	(A,100,36)	RS1/16S681J

Circuit Symbol and No.		Part No.
R 502	(A,102,36)	RS1/16S681J
R 503	(A,103,49)	RAB4C681J
R 521	(A,109,36)	RAB4C681J
R 522	(A,109,49)	RAB4C681J
R 523	(B,104,55)	RS1/16S182J
R 524	(B,104,51)	RS1/16S332J
R 525	(B,111,50)	RS1/16S332J
R 526	(B,115,50)	RS1/16S182J
R 541	(A,115,36)	RAB4C101J
R 542	(A,116,49)	RS1/16S101J
R 543	(A,117,49)	RS1/16S101J
R 551	(A,72,73)	RS1/16S220J
R 552	(A,72,75)	RS1/16S102J
R 561	(A,76,69)	RS1/16S102J
R 562	(A,80,72)	RS1/16S223J
R 571	(A,104,70)	RS1/16S473J
R 572	(A,106,73)	RS1/16S102J
R 573	(A,102,70)	RS1/16S473J
R 574	(A,105,81)	RS1/16S103J
R 575	(A,105,79)	RS1/16S473J
R 576	(A,81,68)	RS1/16S473J
R 577	(A,100,71)	RS1/16S473J
R 578	(A,104,77)	RS1/16S103J
R 579	(A,101,82)	RS1/16S103J
R 581	(B,88,38)	RS1/16S103J
R 582	(B,91,39)	RS1/16S103J
R 583	(B,78,32)	RS1/16S153J
R 584	(B,84,33)	RS1/16S333J
R 585	(B,81,32)	RS1/16S823J
R 586	(B,85,36)	RS1/16S101J
R 601	(A,118,78)	RS1/16S104J
R 602	(B,123,71)	RS1/16S681J
R 603	(B,127,71)	RS1/16S473J
R 604	(B,128,62)	RS1/16S472J
R 605	(B,129,64)	RS1/16S472J
R 606	(A,127,55)	RS1/16S101J
R 607	(A,137,57)	RAB4C681J
R 608	(B,151,59)	RS1/16S104J
R 609	(B,153,59)	RS1/16S104J
R 610	(A,142,69)	RAB4C681J
R 611	(B,119,57)	RS1/16S104J
R 612	(B,113,55)	RS1/16S104J
R 613	(B,130,72)	RS1/16S104J
R 614	(A,133,85)	RS1/16S473J
R 615	(B,132,72)	RS1/16S103J
R 616	(B,134,72)	RS1/16S223J
R 617	(A,112,55)	RS1/16S0R0J
R 618	(B,148,52)	RS1/16S102J
R 619	(B,136,63)	RAB4C681J
R 621	(A,108,54)	RS1/16S104J
R 623	(B,107,54)	RS1/16S104J
R 624	(A,142,67)	RS1/16S104J
R 625	(A,112,73)	RS1/16S473J
R 641	(A,141,93)	RS1/16S104J
R 651	(B,146,70)	RS1/16S183J
R 652	(B,139,71)	RS1/16S102J
R 653	(B,153,56)	RS1/16S222J
R 654	(B,145,66)	RS1/16S473J
R 701	(B,134,47)	RS1/16S221J
R 702	(B,134,45)	RS1/16S221J

Circuit Symbol and No.		Part No.
R 703	(B,130,43)	RS1/16S221J
R 704	(B,134,43)	RS1/16S221J
R 705	(B,130,42)	RS1/16S221J
R 706	(B,147,45)	RAB4C682J
R 707	(B,148,39)	RS1/16S473J
R 708	(B,146,39)	RS1/16S104J
R 709	(B,125,42)	RS1/16S102J
R 751	(A,28,55)	RD1/4PU271J
R 801	(B,106,20)	RS1/16S222J
R 802	(B,110,13)	RS1/16S222J
R 803	(B,110,15)	RS1/16S222J
R 804	(B,128,17)	RS1/16S222J
R 805	(B,128,19)	RS1/16S222J
R 806	(B,128,21)	RS1/16S104J
R 807	(B,131,18)	RS1/16S104J
R 811	(A,135,19)	RS1/16S104J
R 821	(B,62,22)	RS1/16S121J
R 822	(B,66,22)	RS1/16S121J
R 823	(B,70,22)	RS1/16S121J
R 824	(B,71,14)	RS1/16S473J
R 825	(B,68,13)	RS1/16S1R0J
R 831	(B,93,17)	RS1/16S331J
R 841	(B,51,24)	RS1/16S472J
R 842	(B,47,24)	RS1/16S102J
R 843	(B,51,27)	RS1/16S472J
R 851	(A,21,38)	RS1/16S331J
R 852	(A,24,38)	RS1/16S331J
R 853	(A,42,41)	RS1/16S1R0J
R 854	(B,30,37)	RS1/16S391J
R 855	(A,37,36)	RD1/4PU272J
R 856	(A,37,39)	RD1/4PU272J
R 857	(B,42,39)	RS1/16S101J
R 871	(A,37,22)	RS1/16S471J
R 872	(A,35,22)	RS1/16S471J
R 881	(A,149,39)	RAB4C102J
R 885	(A,154,17)	RS1/16S103J
R 886	(A,155,20)	RS1/16S563J
R 891	(A,11,116)	RS1/16S101J
R 892	(A,9,118)	RS1/16S101J
R 893	(A,9,121)	RS1/16S101J
R 894	(A,19,116)	RS1/16S1R0J
R 901	(A,43,89)	RS1/16S221J
R 902	(A,43,91)	RS1/16S221J
R 903	(A,40,90)	RS1/16S223J
R 911	(A,15,91)	RS1/16S473J
R 921	(B,67,116)	RS1/16S104J
R 922	(B,62,124)	RS1/16S472J
R 923	(B,65,120)	RS1/16S223J
R 924	(B,68,117)	RS1/16S103J
R 926	(B,62,126)	RS1/16S102J
R 927	(B,67,111)	RS1/16S473J
R 932	(B,60,118)	RS1/16S103J
R 951	(B,58,120)	RS1/16S153J
R 952	(B,58,116)	RS1/16S472J
R 953	(B,58,112)	RS1/16S472J
R 954	(B,55,112)	RS1/16S102J
R 962	(B,64,108)	RS1/16S153J
R 963	(B,68,108)	RS1/16S102J

CAPACITORS

Circuit Symbol and No.		Part No.
C 103	(B,39,134)	CKSRYB104K16
C 106	(A,32,119)	CKSRYB104K16
C 181	(B,49,137)	CKSRYB473K50
C 201	(A,112,85)	CEAL470M10
C 202	(B,116,86)	CKSRYB104K16
C 203	(A,118,90)	CKSRYB474K10
C 204	(B,122,94)	CKSRYB474K10
C 205	(A,121,85)	CEAL100M25
C 206	(B,113,89)	CKSQYB225K10
C 207	(B,109,90)	CKSQYB225K10
C 208	(B,120,91)	CKSQYB225K10
C 209	(B,113,92)	CKSQYB225K10
C 210	(B,120,96)	CKSRYB104K16
C 211	(B,112,94)	CKSRYB104K16
C 212	(B,120,98)	CKSQYB225K10
C 213	(B,109,97)	CKSQYB225K10
C 214	(B,120,101)	CKSQYB225K10
C 215	(B,109,100)	CKSQYB225K10
C 216	(A,126,98)	CEALNP4R7M35
C 217	(A,103,90)	CEALNP4R7M35
C 218	(A,126,104)	CEALNP4R7M35
C 219	(A,103,97)	CEALNP4R7M35
C 220	(A,126,111)	CEALNP4R7M35
C 221	(A,103,103)	CEALNP4R7M35
C 222	(A,115,111)	CEAL100M25
C 241	(A,87,72)	CKSRYB103K50
C 242	(B,88,78)	CKSRYB104K16
C 243	(A,88,80)	CEAL470M10
C 251	(A,133,95)	CEALNP100M16
C 252	(A,140,98)	CEAL220M16
C 253	(A,140,105)	CEAL100M25
C 254	(A,130,84)	CCSRCH470J50
C 261	(A,83,83)	CKSRYB103K50
C 262	(A,82,87)	CEAL100M25
C 263	(A,90,88)	CEAL220M10
C 264	(A,74,85)	CEAL101M10
C 265	(A,90,105)	CKSQYB225K10
C 266	(A,77,105)	CKSQYB225K10
C 267	(A,91,102)	CKSQYB225K10
C 268	(A,77,102)	CKSQYB225K10
C 269	(A,86,103)	CKSRYB104K16
C 270	(A,81,103)	CKSRYB104K16
C 271	(B,87,96)	CCSRCH470J50
C 272	(B,80,96)	CCSRCH470J50
C 273	(B,90,93)	CCSRCH470J50
C 274	(B,77,93)	CCSRCH470J50
C 275	(B,91,100)	CKSQYB225K10
C 276	(B,76,100)	CKSQYB225K10
C 277	(B,88,93)	CCSRCH470J50
C 278	(B,79,93)	CCSRCH470J50
C 301	(A,124,126)	CEAL100M25
C 302	(A,131,126)	CEAL100M25
C 303	(A,77,113)	CEAL100M25
C 304	(A,84,113)	CEAL100M25
C 305	(A,141,126)	CEAL100M25
C 306	(A,148,126)	CEAL100M25
C 321	(A,124,118)	CEAL220M35
C 351	(A,104,116)	CKSRYB474K10
C 352	(A,102,116)	CKSRYB474K10
C 353	(A,100,116)	CKSRYB474K10

Circuit Symbol and No.		Part No.
C 354	(A,98,116)	CKSRYB474K10
C 356	(A,114,125)	CEAL100M25
C 357	(B,116,137)	CKSQYB225K10
C 358	(B,120,137)	CKSQYB225K10
C 359	(B,108,139)	CKSRYB104K16
C 360	(A,81,127) 3 300 µF/16 V	CCH1486
C 361	(A,104,119)	CKSQYB474K16
C 362	(A,102,119)	CKSQYB474K16
C 363	(A,100,119)	CKSQYB474K16
C 364	(A,98,119)	CKSQYB474K16
C 367	(A,115,118)	CEHAR330M10
C 401	(A,162,115)	CKSRYB104K16
C 402	(A,156,117)	CEAL101M10
C 403	(B,166,142)	CKSRYB103K50
C 404	(A,160,104)	CEJQ470M10
C 405	(B,170,107)	CKSRYB103K50
C 407	(A,160,110)	CEJQ470M10
C 408	(B,166,113)	CKSRYB103K50
C 409	(A,147,89)	CCSRCH101J50
C 410	(B,171,110)	CCSRCH101J50
C 431	(B,153,78)	CKSYB475K16
C 432	(B,153,85)	CKSRYB103K50
C 433	(A,160,88)	CEJQ220M25
C 434	(B,166,89)	CKSRYB102K50
C 451	(A,34,74) 470 µF/16 V	CCH1339
C 452	(A,25,66)	CEHAS101M10
C 453	(B,24,70)	CKSRYB103K50
C 454	(A,24,74)	CEHAS101M10
C 461	(B,68,38)	CKSYB475K16
C 462	(B,60,41)	CKSRYB103K50
C 463	(B,63,48)	CKSRYB103K50
C 464	(A,54,53)	CEAL220M16
C 465	(B,66,50)	CKSYB106K6R3
C 466	(B,69,50)	CKSYB106K6R3
C 482	(B,100,40)	CKSRYB102K50
C 501	(B,103,43)	CKSRYB104K16
C 521	(B,109,44)	CKSRYB104K16
C 541	(B,116,44)	CKSRYB104K16
C 551	(A,79,78)	CEAL330M6R3
C 571	(A,98,76)	CKSRYB104K16
C 572	(A,104,73)	CKSRYB105K10
C 573	(A,81,69)	CKSRYB105K10
C 574	(A,100,70)	CCSRCH470J50
C 575	(A,101,81)	CCSRCH470J50
C 581	(B,91,30)	CKSQYB225K10
C 582	(B,76,32)	CKSRYB104K16
C 583	(B,84,31)	CKSRYB682K50
C 584	(B,79,32)	CKSRYB331K50
C 585	(B,88,40)	CKSRYB103K50
C 602	(B,108,65)	CKSRYB103K50
C 603	(A,105,65)	CEAL4R7M50
C 604	(B,121,71)	CCSRCH100D50
C 605	(B,120,67)	CCSRCH100D50
C 606	(B,149,55)	CCSRCH470J50
C 651	(B,142,70)	CKSRYB105K10
C 653	(B,147,66)	CKSRYB104K16
C 701	(A,142,25)	CCSRCH101J50
C 751	(B,39,52)	CKSRYB473K50
C 752	(B,41,52)	CKSRYB102K50
C 753	(A,40,55)	CEAT221M10

Circuit Symbol and No.		Part No.
C 821	(B,71,19)	CKSRYB473K50
C 831	(A,91,13)	CKSRYB104K16
C 841	(B,49,27)	CCSRCH101J50
C 842	(A,54,19)	CKSRYB473K50
C 851	(B,34,45)	CKSRYB104K16
C 852	(A,46,46)	CEJQ470M25
C 853	(A,38,46)	CEAL101M10
C 854	(B,35,46)	CKSRYB104K16
C 855	(B,35,30)	CCSRCH331J50
C 856	(B,37,34)	CKSRYB103K50
C 857	(A,45,36)	CEJQ470M25
C 858	(A,44,30) 4.7 µF	CCG1111
C 872	(B,31,18)	CKSRYB224K10
C 873	(B,33,17)	CKSRYB104K16
C 874	(A,35,17)	CEJQ220M25
C 881	(B,155,33)	CCSRCH102J50
C 882	(B,152,23)	CCSRCH101J50
C 883	(B,152,30)	CCSRCH101J50
C 884	(A,154,20)	CKSRYB103K50
C 885	(A,143,19)	CKSRYB105K10
C 891	(A,11,113)	CKSRYB103K50
C 892	(B,14,122)	CKSRYB103K50
C 893	(A,14,120)	CEAL100M25
C 901	(A,22,86) 470 µF/16 V	CCH1339
C 902	(A,34,85) 470 µF/16 V	CCH1339
C 903	(A,28,92)	CKSRYB103K50
C 904	(A,39,80)	CKSRYB104K25
C 905	(A,44,81)	CEAL101M10
C 906	(A,34,97) 470 µF/16 V	CCH1339
C 911	(A,22,103) 100 µF/25 V	CCH1316
C 912	(A,15,93)	CKSRYB103K50
C 913	(A,22,95)	CEHAS101M10
C 921	(B,62,122)	CKSRYB104K25
C 931	(B,78,139)	CKSRYB473K50
C 932	(B,61,111)	CKSQYB105K16
C 941	(A,89,119)	CKSRYB473K50
C 951	(B,55,121)	CKSRYB104K25
C 961	(B,66,108)	CKSRYB104K16

A

Unit Number : CWN1426(DEH-P7850BT/XN/ES)
Unit Name : Tuner Amp Unit

MISCELLANEOUS

IC 101	(B,32,118) IC	HA12241FP
IC 201	(A,115,98) IC	PML016B
IC 261	(A,84,97) IC	BA3131FS
IC 351	(A,101,137) IC	PAL007B
IC 431	(B,161,82) IC	NJM2391DL1-33
IC 461	(B,68,43) IC	NJM2391DL1-33
IC 501	(A,102,43) IC	TC74VHCT08AFTS1
IC 521	(A,109,43) IC	TC74VHC08FTS1
IC 541	(A,116,43) IC	S99-50084
IC 571	(A,101,76) IC	NJM4558V
IC 581	(B,91,34) IC	NJM4558MD
IC 601	(A,130,70) IC	PEG263A
IC 651	(B,153,73) IC	BD4835G
IC 851	(A,33,30) IC	NJM2360M
IC 881	(A,149,19) IC	BA6288FS

Circuit Symbol and No.		Part No.
IC 911	(A,11,97) IC	NJM2388F84
Q 101	(A,30,122) Transistor	UMF23N
Q 241	(B,95,76) Transistor	2SD1767
Q 242	(A,87,70) Transistor	UMD2N
Q 261	(A,67,71) Transistor	DTC124EUA
Q 301	(B,136,128) Transistor	IMH23
Q 302	(A,72,105) Transistor	IMH23
Q 303	(B,136,125) Transistor	IMH23
Q 321	(A,109,110) Transistor	UMD2N
Q 351	(B,108,123) Transistor	DTC114EU
Q 352	(A,109,118) Transistor	DTC124EUA
Q 381	(B,102,146) Transistor	2SC4081
Q 451	(A,37,64) Transistor	2SB1243
Q 452	(B,30,70) Transistor	DTC114EU
Q 453	(A,17,72) Transistor	2SD2396
Q 561	(A,76,72) Transistor	DTC314TU
Q 651	(B,151,66) Transistor	2SC3052-12
Q 751	(A,17,56) Transistor	2SD2396
Q 752	(B,32,54) Transistor	UMD2N
Q 821	(B,63,17) Transistor	2SD1767
Q 822	(B,76,20) Transistor	UMD2N
Q 831	(B,87,18) Transistor	DTC114EU
Q 841	(B,42,25) Transistor	UMF23N
Q 851	(A,24,44) Transistor	2SD1760F5
Q 852	(A,28,39) Transistor	UMD2N
Q 871	(A,45,20) Transistor	2SD1760F5
Q 872	(A,33,22) Transistor	UMD2N
Q 891	(A,18,113) Transistor	2SD1767
Q 892	(A,9,113) Transistor	UMD2N
Q 901	(B,26,80) Transistor	2SD1760F5
Q 902	(A,42,93) Transistor	UMD3N
Q 921	(A,66,113) Transistor	UMX1N
Q 931	(A,60,111) Transistor	RT1N141C-12
Q 951	(B,55,114) Transistor	2SA1576
D 181	(B,49,121) Diode	DAP202U
D 182	(B,49,117) Diode	DAN202U
D 241	(A,87,74) Diode	HZS12L(B1)
D 242	(A,130,86) Diode Network	DA204U
D 261	(A,67,68) Diode	DAN202U
D 321	(A,119,131) Diode	1SS133
D 381	(B,96,145) Diode	HZU8R2(B3)
D 382	(A,109,115) Diode	DAN202U
D 431	(A,158,80) Diode	1SR154-400
D 432	(A,166,80) Diode	1SR154-400
D 433	(A,158,83) Diode	1SR154-400
D 451	(B,22,69) Diode	UDZS5R6(B)
D 452	(A,19,64) Diode	DAN202U
D 461	(B,66,58) Diode	1SR154-400
D 551	(B,133,56) Diode	DAN202U
D 561	(A,78,71) Diode	1SS355
D 651	(B,149,71) Diode	1SS355
D 751	(A,25,55) Diode	HZS7L(C3)
D 801	(B,106,18) Diode	DAP202U
D 802	(B,106,15) Diode	DAN202U
D 803	(B,119,15) Diode	DAP202U
D 804	(B,115,15) Diode	DAN202U
D 805	(B,124,15) Diode	DAP202U
D 806	(B,128,15) Diode	DAN202U
D 821	(B,68,18) Diode	HZU10(B1)
D 831	(A,91,11) LED	SML412BC5T(MN)

Circuit Symbol and No.		Part No.
D 851	(A,32,45) Diode	HZS11L(A1)
D 852	(B,31,34) Diode	RB411D
D 871	(A,29,18) Diode	HZS7L(B3)
D 881	(A,152,28) Diode	1SS133
D 882	(A,152,25) Diode	1SS133
D 891	(A,13,112) Diode	UDZS12(B)
D 901	(A,34,105) Diode	MPG06G-6415G50
D 902	(A,28,91) Diode	UDZS5R6(B)
D 921	(B,63,113) Diode	UDZS7R5(B)
D 922	(B,63,118) Diode	HZU6R8(B2)
D 931	(A,54,127) Diode	MPG06G-6415G50
D 941	(A,92,112) Diode	MPG06G-6415G50
D 942	(A,92,115) Diode	MPG06G-6415G50
D 951	(B,55,118) Diode	DAN202U
D 961	(A,71,114) Diode	HZS7L(C2)
D 962	(B,61,108) Diode Network	DA204U
D 981	(A,54,130) Diode	MPG06G-6415G50
D 982	(A,76,133) Diode	MPG06G-6415G50
ZNR401	(A,159,144)Surge Protector	RCCA-201Q31UA-PI
L 101	(A,28,119) Inductor	LCTC1R0K1608
L 201	(A,109,80) Inductor	LCTAW2R2J2520
L 401	(B,166,147) Inductor	LCTAW220J2520
L 402	(A,162,118) Chip Coil	LCTAW1R0J2520
L 403	(B,163,114) Inductor	CTF1379
L 404	(A,161,97) Inductor	LCTAW2R2J2520
L 501	(B,102,39) Inductor	CTF1379
L 521	(B,106,44) Inductor	CTF1379
L 541	(B,112,44) Inductor	CTF1379
L 601	(A,100,65) Ferri-Inductor	LAU100K
L 701	(A,140,22) Ferri-Inductor	LAU100K
L 841	(A,54,25) Ferri-Inductor	LAU100K
L 851	(A,24,31) Inductor	CTF1660
L 852	(A,40,31) Chip Coil	LCTAW4R7J2520
L 881	(A,142,16) Inductor	LCTAW2R2J2520
L 951	(B,56,124) Inductor	LCTAW2R2J2520
X 601	(A,116,68)Crystal Resonator	20.000 MHz VSS1167
⚠FU301	(A,145,121) Fuse 3 A	CEK1286
⚠FU302	(A,66,106) Fuse 3 A	CEK1286
SP601	(A,150,50) Buzzer	CPV1062
M 891	Fan Motor	CXM1288
	FM/AM Tuner Unit	CWE1952

RESISTORS

R 101	(B,42,120)	RS1/16S102J
R 102	(B,41,125)	RS1/16S102J
R 103	(B,40,120)	RS1/16S223J
R 104	(B,39,125)	RS1/16S223J
R 105	(B,38,120)	RS1/16S181J
R 106	(B,38,125)	RS1/16S181J
R 107	(A,27,122)	RS1/16S222J
R 108	(B,32,113)	RS1/16S101J
R 109	(B,31,113)	RS1/16S102J
R 111	(B,30,133)	RS1/16S101J
R 112	(B,30,135)	RS1/16S101J
R 113	(B,34,134)	RS1/16S470J
R 114	(B,36,134)	RS1/16S150J
R 115	(A,34,122)	RS1/16S332J
R 116	(A,33,122)	RS1/16S562J

Circuit Symbol and No.		Part No.
R 201	(A,102,85)	RS1/16S101J
R 202	(B,105,84)	RS1/16S101J
R 203	(A,106,85)	RAB4C102J
R 241	(A,84,70)	RS1/16S182J
R 261	(A,91,98)	RS1/16S103J
R 262	(A,77,98)	RS1/16S103J
R 263	(B,87,101)	RS1/16S473J
R 264	(B,81,101)	RS1/16S473J
R 265	(B,87,99)	RS1/16S473J
R 266	(B,81,99)	RS1/16S473J
R 267	(B,87,97)	RS1/16S103J
R 268	(B,81,97)	RS1/16S103J
R 269	(B,92,93)	RS1/16S103J
R 270	(B,76,93)	RS1/16S103J
R 271	(B,91,97)	RS1/16S103J
R 272	(B,76,97)	RS1/16S103J
R 273	(A,77,95)	RS1/16S102J
R 274	(A,77,94)	RS1/16S102J
R 275	(B,85,93)	RS1/16S183J
R 276	(B,83,93)	RS1/16S183J
R 277	(B,87,93)	RS1/16S223J
R 278	(B,81,93)	RS1/16S223J
R 281	(A,70,71)	RS1/16S103J
R 301	(B,125,128)	RS1/16S390J
R 302	(B,128,126)	RS1/16S390J
R 303	(A,74,108)	RS1/16S390J
R 304	(A,69,105)	RS1/16S390J
R 305	(B,144,127)	RS1/16S390J
R 306	(B,146,127)	RS1/16S390J
R 308	(B,137,139)	RS1/16S223J
R 309	(B,122,130)	RS1/16S223J
R 310	(B,67,95)	RS1/16S223J
R 311	(B,67,97)	RS1/16S223J
R 312	(B,145,139)	RS1/16S223J
R 313	(B,143,139)	RS1/16S223J
R 321	(B,123,109)	RS1/16S102J
R 351	(A,100,112)	RS1/16S182J
R 352	(A,98,112)	RS1/16S182J
R 353	(A,102,112)	RS1/16S182J
R 354	(A,104,112)	RS1/16S182J
R 355	(B,102,116)	RS1/16S272J
R 356	(B,98,116)	RS1/16S272J
R 357	(B,104,116)	RS1/16S272J
R 358	(B,107,116)	RS1/16S272J
R 359	(B,116,132)	RS1/16S153J
R 360	(A,108,123)	RS1/16S103J
R 361	(A,108,121)	RS1/16S331J
R 362	(A,108,120)	RS1/16S103J
R 363	(B,108,121)	RS1/16S101J
R 364	(B,119,112)	RS1/16S472J
R 365	(B,116,113)	RS1/16S472J
R 381	(B,98,147)	RS1/16S104J
R 382	(B,102,148)	RS1/16S473J
R 383	(A,108,113)	RS1/16S472J
R 384	(A,130,89)	RS1/16S473J
R 401	(B,165,118)	RS1/16S681J
R 402	(B,166,124)	RS1/16S681J
R 403	(B,165,124)	RS1/16S681J
R 404	(B,165,127)	RS1/16S681J
R 405	(B,165,129)	RS1/16S681J

Circuit Symbol and No.		Part No.
R 406	(B,165,131)	RS1/16S681J
R 407	(B,165,132)	RS1/16S681J
R 409	(B,155,90)	RS1/16S0R0J
R 410	(B,155,88)	RS1/16S0R0J
R 451	(B,40,62)	RS1/16S223J
R 452	(A,34,64)	RD1/4PU152J
R 453	(A,31,64)	RD1/4PU0R0J
R 454	(B,20,71)	RS1/16S472J
R 455	(B,53,47)	RS1/16S0R0J
R 501	(A,100,36)	RS1/16S681J
R 502	(A,102,36)	RS1/16S681J
R 503	(A,103,49)	RAB4C681J
R 521	(A,109,36)	RAB4C681J
R 522	(A,109,49)	RAB4C681J
R 523	(B,104,55)	RS1/16S182J
R 524	(B,104,51)	RS1/16S332J
R 525	(B,111,50)	RS1/16S332J
R 526	(B,115,50)	RS1/16S182J
R 541	(A,115,36)	RAB4C101J
R 542	(A,116,49)	RS1/16S101J
R 543	(A,117,49)	RS1/16S101J
R 551	(A,72,73)	RS1/16S220J
R 552	(A,72,75)	RS1/16S102J
R 561	(A,76,69)	RS1/16S102J
R 562	(A,80,72)	RS1/16S223J
R 571	(A,104,70)	RS1/16S473J
R 572	(A,106,73)	RS1/16S102J
R 573	(A,102,70)	RS1/16S473J
R 574	(A,105,81)	RS1/16S103J
R 575	(A,105,79)	RS1/16S473J
R 576	(A,81,68)	RS1/16S473J
R 577	(A,100,71)	RS1/16S473J
R 578	(A,104,77)	RS1/16S103J
R 579	(A,101,82)	RS1/16S103J
R 581	(B,88,38)	RS1/16S103J
R 582	(B,91,39)	RS1/16S103J
R 583	(B,78,32)	RS1/16S153J
R 584	(B,84,33)	RS1/16S333J
R 585	(B,81,32)	RS1/16S823J
R 586	(B,85,36)	RS1/16S101J
R 601	(A,118,78)	RS1/16S104J
R 602	(B,123,71)	RS1/16S681J
R 603	(B,127,71)	RS1/16S473J
R 604	(B,128,62)	RS1/16S472J
R 605	(B,129,64)	RS1/16S472J
R 606	(A,127,55)	RS1/16S101J
R 607	(A,137,57)	RAB4C681J
R 608	(B,151,59)	RS1/16S104J
R 609	(B,153,59)	RS1/16S104J
R 610	(A,142,69)	RAB4C681J
R 611	(B,119,57)	RS1/16S104J
R 612	(B,113,55)	RS1/16S104J
R 613	(B,130,72)	RS1/16S104J
R 614	(A,133,85)	RS1/16S473J
R 615	(B,132,72)	RS1/16S103J
R 616	(B,134,72)	RS1/16S223J
R 617	(A,112,55)	RS1/16S0R0J
R 618	(B,148,52)	RS1/16S102J
R 619	(B,136,63)	RAB4C681J
R 621	(A,108,54)	RS1/16S104J

Circuit Symbol and No.		Part No.
R 623	(B,107,54)	RS1/16S104J
R 624	(A,142,67)	RS1/16S104J
R 625	(A,112,73)	RS1/16S473J
R 641	(A,141,93)	RS1/16S104J
R 651	(B,146,70)	RS1/16S183J
R 652	(B,139,71)	RS1/16S102J
R 653	(B,153,56)	RS1/16S222J
R 654	(B,145,66)	RS1/16S473J
R 701	(B,134,47)	RS1/16S221J
R 702	(B,134,45)	RS1/16S221J
R 703	(B,130,43)	RS1/16S221J
R 704	(B,134,43)	RS1/16S221J
R 705	(B,130,42)	RS1/16S221J
R 706	(B,147,45)	RAB4C682J
R 707	(B,148,39)	RS1/16S473J
R 708	(B,146,39)	RS1/16S104J
R 709	(B,125,42)	RS1/16S102J
R 751	(A,28,55)	RD1/4PU271J
R 801	(B,106,20)	RS1/16S222J
R 802	(B,110,13)	RS1/16S222J
R 803	(B,110,15)	RS1/16S222J
R 804	(B,128,17)	RS1/16S222J
R 805	(B,128,19)	RS1/16S222J
R 806	(B,128,21)	RS1/16S104J
R 807	(B,131,18)	RS1/16S104J
R 811	(A,135,19)	RS1/16S104J
R 821	(B,62,22)	RS1/16S121J
R 822	(B,66,22)	RS1/16S121J
R 823	(B,70,22)	RS1/16S121J
R 824	(B,71,14)	RS1/16S473J
R 825	(B,68,13)	RS1/16S1R0J
R 831	(B,93,17)	RS1/16S331J
R 841	(B,51,24)	RS1/16S472J
R 842	(B,47,24)	RS1/16S102J
R 843	(B,51,27)	RS1/16S472J
R 851	(A,21,38)	RS1/16S331J
R 852	(A,24,38)	RS1/16S331J
R 853	(A,42,41)	RS1/16S1R0J
R 854	(B,30,37)	RS1/16S391J
R 855	(A,37,36)	RD1/4PU272J
R 856	(A,37,39)	RD1/4PU272J
R 857	(B,42,39)	RS1/16S101J
R 871	(A,37,22)	RS1/16S471J
R 872	(A,35,22)	RS1/16S471J
R 881	(A,149,39)	RAB4C102J
R 885	(A,154,17)	RS1/16S103J
R 886	(A,155,20)	RS1/16S563J
R 891	(A,11,116)	RS1/16S101J
R 892	(A,9,118)	RS1/16S101J
R 893	(A,9,121)	RS1/16S101J
R 894	(A,19,116)	RS1/16S1R0J
R 901	(A,43,89)	RS1/16S221J
R 902	(A,43,91)	RS1/16S221J
R 903	(A,40,90)	RS1/16S223J
R 911	(A,15,91)	RS1/16S473J
R 921	(B,67,116)	RS1/16S104J
R 922	(B,62,124)	RS1/16S472J
R 923	(B,65,120)	RS1/16S223J
R 924	(B,68,117)	RS1/16S103J
R 926	(B,62,126)	RS1/16S102J
R 927	(B,67,111)	RS1/16S473J
R 932	(B,60,118)	RS1/16S103J
R 951	(B,58,120)	RS1/16S153J
R 952	(B,58,116)	RS1/16S472J
R 953	(B,58,112)	RS1/16S472J
R 954	(B,55,112)	RS1/16S102J
R 962	(B,64,108)	RS1/16S153J
R 963	(B,68,108)	RS1/16S102J

CAPACITORS

C 103	(B,39,134)	CKSRYB104K16
C 106	(A,32,119)	CKSRYB104K16
C 181	(B,49,137)	CKSRYB473K50
C 201	(A,112,85)	CEAL470M10
C 202	(B,116,86)	CKSRYB104K16
C 203	(A,118,90)	CKSRYB474K10
C 205	(A,121,85)	CEAL100M25
C 206	(B,113,89)	CKSQYB225K10
C 207	(B,109,90)	CKSQYB225K10
C 208	(B,120,91)	CKSQYB225K10
C 209	(B,113,92)	CKSQYB225K10
C 210	(B,120,96)	CKSRYB104K16
C 211	(B,112,94)	CKSRYB104K16
C 212	(B,120,98)	CKSQYB225K10
C 213	(B,109,97)	CKSQYB225K10
C 214	(B,120,101)	CKSQYB225K10
C 215	(B,109,100)	CKSQYB225K10
C 216	(A,126,98)	CEALNP4R7M35
C 217	(A,103,90)	CEALNP4R7M35
C 218	(A,126,104)	CEALNP4R7M35
C 219	(A,103,97)	CEALNP4R7M35
C 220	(A,126,111)	CEALNP4R7M35
C 221	(A,103,103)	CEALNP4R7M35
C 222	(A,115,111)	CEAL100M25
C 223	(A,121,90)	CKSRYB104K16
C 241	(A,87,72)	CKSRYB103K50
C 242	(B,88,78)	CKSRYB104K16
C 243	(A,88,80)	CEAL470M10
C 254	(A,130,84)	CCSRCH470J50
C 261	(A,83,83)	CKSRYB103K50
C 262	(A,82,87)	CEAL100M25
C 263	(A,90,88)	CEAL220M10
C 264	(A,74,85)	CEAL101M10
C 265	(A,90,105)	CKSQYB225K10
C 266	(A,77,105)	CKSQYB225K10
C 267	(A,91,102)	CKSQYB225K10
C 268	(A,77,102)	CKSQYB225K10
C 269	(A,86,103)	CKSRYB104K16
C 270	(A,81,103)	CKSRYB104K16
C 271	(B,87,96)	CCSRCH470J50
C 272	(B,80,96)	CCSRCH470J50
C 273	(B,90,93)	CCSRCH470J50
C 274	(B,77,93)	CCSRCH470J50
C 275	(B,91,100)	CKSQYB225K10
C 276	(B,76,100)	CKSQYB225K10
C 277	(B,88,93)	CCSRCH470J50
C 278	(B,79,93)	CCSRCH470J50
C 301	(A,124,126)	CEAL100M25
C 302	(A,131,126)	CEAL100M25
C 303	(A,77,113)	CEAL100M25

Circuit Symbol and No.		Part No.
C 304	(A,84,113)	CEAL100M25
C 305	(A,141,126)	CEAL100M25
C 306	(A,148,126)	CEAL100M25
C 321	(A,124,118)	CEAL220M35
C 351	(A,104,116)	CKSRYB474K10
C 352	(A,102,116)	CKSRYB474K10
C 353	(A,100,116)	CKSRYB474K10
C 354	(A,98,116)	CKSRYB474K10
C 356	(A,114,125)	CEAL100M25
C 357	(B,116,137)	CKSQYB225K10
C 358	(B,120,137)	CKSQYB225K10
C 359	(B,108,139)	CKSRYB104K16
C 360	(A,81,127) 3 300 µF/16 V	CCH1486
C 361	(A,104,119)	CKSQYB474K16
C 362	(A,102,119)	CKSQYB474K16
C 363	(A,100,119)	CKSQYB474K16
C 364	(A,98,119)	CKSQYB474K16
C 367	(A,115,118)	CEHAR330M10
C 401	(A,162,115)	CKSRYB104K16
C 402	(A,156,117)	CEAL101M10
C 403	(B,166,142)	CKSRYB103K50
C 404	(A,160,104)	CEJQ470M10
C 405	(B,170,107)	CKSRYB103K50
C 407	(A,160,110)	CEJQ470M10
C 408	(B,166,113)	CKSRYB103K50
C 409	(A,147,89)	CCSRCH101J50
C 410	(B,171,110)	CCSRCH101J50
C 431	(B,153,78)	CKSYB475K16
C 432	(B,153,85)	CKSRYB103K50
C 433	(A,160,88)	CEJQ220M25
C 434	(B,166,89)	CKSRYB102K50
C 451	(A,34,74) 470 µF/16 V	CCH1339
C 452	(A,25,66)	CEHAS101M10
C 453	(B,24,70)	CKSRYB103K50
C 454	(A,24,74)	CEHAS101M10
C 461	(B,68,38)	CKSYB475K16
C 462	(B,60,41)	CKSRYB103K50
C 463	(B,63,48)	CKSRYB103K50
C 464	(A,54,53)	CEAL220M16
C 482	(B,100,40)	CKSRYB102K50
C 501	(B,103,43)	CKSRYB104K16
C 521	(B,109,44)	CKSRYB104K16
C 541	(B,116,44)	CKSRYB104K16
C 551	(A,79,78)	CEAL330M6R3
C 571	(A,98,76)	CKSRYB104K16
C 572	(A,104,73)	CKSRYB105K10
C 573	(A,81,69)	CKSRYB105K10
C 574	(A,100,70)	CCSRCH470J50
C 575	(A,101,81)	CCSRCH470J50
C 581	(B,91,30)	CKSQYB225K10
C 582	(B,76,32)	CKSRYB104K16
C 583	(B,84,31)	CKSRYB682K50
C 584	(B,79,32)	CKSRYB331K50
C 585	(B,88,40)	CKSRYB103K50
C 602	(B,108,65)	CKSRYB103K50
C 603	(A,105,65)	CEAL4R7M50
C 604	(B,121,71)	CCSRCH100D50
C 605	(B,120,67)	CCSRCH100D50
C 606	(B,149,55)	CCSRCH470J50
C 651	(B,142,70)	CKSRYB105K10

Circuit Symbol and No.		Part No.
C 653	(B,147,66)	CKSRYB104K16
C 701	(A,142,25)	CCSRCH101J50
C 751	(B,39,52)	CKSRYB473K50
C 752	(B,41,52)	CKSRYB102K50
C 753	(A,40,55)	CEAT221M10
C 821	(B,71,19)	CKSRYB473K50
C 831	(A,91,13)	CKSRYB104K16
C 841	(B,49,27)	CCSRCH101J50
C 842	(A,54,19)	CKSRYB473K50
C 851	(B,34,45)	CKSRYB104K16
C 852	(A,46,46)	CEJQ470M25
C 853	(A,38,46)	CEAL101M10
C 854	(B,35,46)	CKSRYB104K16
C 855	(B,35,30)	CCSRCH331J50
C 856	(B,37,34)	CKSRYB103K50
C 857	(A,45,36)	CEJQ470M25
C 858	(A,44,30) 4.7 µF	CCG1111
C 872	(B,31,18)	CKSRYB224K10
C 873	(B,33,17)	CKSRYB104K16
C 874	(A,35,17)	CEJQ220M25
C 881	(B,155,33)	CCSRCH102J50
C 882	(B,152,23)	CCSRCH101J50
C 883	(B,152,30)	CCSRCH101J50
C 884	(A,154,20)	CKSRYB103K50
C 885	(A,143,19)	CKSRYB105K10
C 891	(A,11,113)	CKSRYB103K50
C 892	(B,14,122)	CKSRYB103K50
C 893	(A,14,120)	CEAL100M25
C 901	(A,22,86) 470 µF/16 V	CCH1339
C 902	(A,34,85) 470 µF/16 V	CCH1339
C 903	(A,28,92)	CKSRYB103K50
C 904	(A,39,80)	CKSRYB104K25
C 905	(A,44,81)	CEAL101M10
C 906	(A,34,97) 470 µF/16 V	CCH1339
C 911	(A,22,103) 100 µF/25 V	CCH1316
C 912	(A,15,93)	CKSRYB103K50
C 913	(A,22,95)	CEHAS101M10
C 921	(B,62,122)	CKSRYB104K25
C 931	(B,78,139)	CKSRYB473K50
C 932	(B,61,111)	CKSQYB105K16
C 941	(A,89,119)	CKSRYB473K50
C 951	(B,55,121)	CKSRYB104K25
C 961	(B,66,108)	CKSRYB104K16

B

Unit Number :
Unit Name : Keyboard Unit

MISCELLANEOUS

IC 1901	(B,98,22) IC	PEG168A
IC 1921	(A,149,23) IC	PD8158A
IC 1931	(A,95,7) IC	GP1UX31RK
IC 1951	(B,112,12) IC	S-818A33AUC-BGN
Q 1861	(B,25,27) Transistor	DTC143EUA
Q 1961	(B,128,21) Transistor	2SC4617
Q 1962	(A,127,17) Transistor	2SD1664
D 1831	(A,40,23) LED	SML412BC5T(MN)
D 1832	(A,57,6) LED	SML412BC5T(MN)
D 1833	(A,57,40) LED	SML412BC5T(MN)

Circuit Symbol and No.		Part No.
D 1834	(A,23,35) LED	SML412BC5T(MN)
D 1835	(A,9,36) LED	SML412BC5T(MN)
D 1836	(A,9,10) LED	SML412BC5T(MN)
D 1837	(A,35,34) LED	SML412BC5T(MN)
D 1838	(A,79,34) LED	SML412BC5T(MN)
D 1839	(A,35,12) LED	SML412BC5T(MN)
D 1840	(A,158,7) LED	SML412BC5T(MN)
D 1841	(A,79,12) LED	SML412BC5T(MN)
D 1842	(A,74,23) LED	SML412BC5T(MN)
D 1861	(A,13,23) LED	SML412BC5T(MN)
D 1863	(A,28,23) LED	SML412BC5T(MN)
D 1901	(B,82,20) Diode	1SS355
L 1951	(B,118,14) Inductor	CTF1617
L 1961	(B,132,15) Inductor	CTF1617
TH1961	(B,116,18) Thermistor	CCX1037
X 1901	(B,85,20)Ceramic Resonator 16.000 MHz	CSS1616
S 1801	(A,150,6) Push Switch	CSG1155
S 1811	(A,57,23)Switch(MULTI-CONTROL)	CSX1065
S 1831	(A,24,40) Push Switch	CSG1155
S 1832	(A,8,40) Push Switch	CSG1155
S 1833	(A,8,6) Push Switch	CSG1155
S 1834	(A,35,37) Push Switch	CSG1155
S 1835	(A,31,23) Push Switch	CSG1155
S 1836	(A,35,9) Push Switch	CSG1155
S 1837	(A,78,37) Push Switch	CSG1155
S 1838	(A,161,7) Push Switch	CSG1155
S 1839	(A,78,9) Push Switch	CSG1155
VR1961	(B,128,14) Semi-fixed 10 kΩ(B)	CCP1229

RESISTORS

R 1801	(B,101,37)	RS1/16S222J
R 1802	(B,101,39)	RS1/16S222J
R 1803	(B,159,16)	RS1/16S333J
R 1811	(B,63,30)	RS1/16S103J
R 1812	(B,59,23)	RS1/16S333J
R 1813	(B,59,26)	RS1/16S103J
R 1814	(B,65,30)	RS1/16S102J
R 1815	(B,60,26)	RS1/16S332J
R 1816	(B,50,35)	RS1/16S102J
R 1818	(B,53,12)	RS1/16S103J
R 1819	(B,60,23)	RS1/16S222J
R 1831	(B,56,7)	RS1/16S561J
R 1834	(B,36,14)	RS1/16S561J
R 1836	(B,58,7)	RS1/16S561J
R 1838	(B,35,34)	RS1/16S561J
R 1841	(B,11,30)	RS1/16S122J
R 1843	(B,76,28)	RS1/16S561J
R 1861	(B,17,31)	RS1/16S181J
R 1865	(B,20,29)	RS1/16S681J
R 1868	(B,22,29)	RS1/16S681J
R 1901	(B,84,34)	RS1/16S103J
R 1902	(B,79,25)	RS1/16S473J
R 1903	(B,80,20)	RS1/16S154J
R 1904	(B,85,28)	RAB4C102J
R 1905	(B,73,7)	RS1/16S104J
R 1906	(B,94,35)	RAB4C473J
R 1907	(B,73,18)	RAB4C102J
R 1908	(B,53,10)	RS1/16S221J
R 1909	(B,97,35)	RAB4C473J
R 1910	(B,101,6)	RAB4C101J
R 1911	(B,104,9)	RAB4C101J
R 1912	(B,142,15)	RAB4C101J
R 1913	(B,146,28)	RS1/16S101J
R 1914	(B,159,26)	RS1/16S101J
R 1915	(B,159,29)	RAB4C101J
R 1916	(A,116,8)	RAB4C101J
R 1917	(A,106,19)	RAB4C101J
R 1918	(A,106,23)	RAB4C101J
R 1919	(B,145,24)	RAB4C101J
R 1920	(B,104,34)	RAB4C101J
R 1931	(B,81,12)	RS1/16S101J
R 1932	(B,89,5)	RS1/16S103J
R 1933	(B,82,12)	RS1/16S2R2J
R 1951	(B,117,11)	RS1/16S222J
R 1961	(B,117,21)	RS1/16S333J
R 1962	(B,129,20)	RS1/16S183J
R 1963	(B,118,19)	RS1/16S563J
R 1964	(B,120,21)	RS1/16S392J
R 1965	(A,117,20)	RAB4C101J
R 1966	(A,130,21)	RS1/16S152J

CAPACITORS

C 1831	(A,39,23)	CKSRYF104Z50
C 1832	(A,54,6)	CKSRYF104Z50
C 1833	(A,60,40)	CKSRYF104Z50
C 1834	(A,23,36)	CKSRYF104Z50
C 1835	(A,8,34)	CKSRYF104Z50
C 1836	(A,8,11)	CKSRYF104Z50
C 1837	(A,36,32)	CKSRYF104Z50
C 1838	(A,79,33)	CKSRYF104Z50
C 1839	(A,37,15)	CKSRYF104Z50
C 1840	(A,156,7)	CKSRYF104Z50
C 1841	(A,79,13)	CKSRYF104Z50
C 1842	(A,75,26)	CKSRYF104Z50
C 1861	(A,13,20)	CKSRYF104Z50
C 1862	(B,28,27)	CKSRYF104Z50
C 1864	(A,26,24)	CKSRYF104Z50
C 1901	(B,81,25)	CKSRYB103K50
C 1902	(B,79,17)	CKSRYB104K25
C 1903	(B,109,21)	CKSRYB103K50
C 1921	(B,150,28)	CKSRYB103K50
C 1931	(B,81,8)	CSZSR100M16
C 1951	(B,111,16)	CSZSR4R7M16
C 1952	(B,122,12)	CSZSR4R7M10
C 1953	(B,114,17)	CKSRYB103K50
C 1954	(B,122,18)	CSZSR4R7M10
C 1963	(A,117,23)	CKSRYB104K25
C 1964	(A,123,21)	CKSRYB104K25
C 1965	(A,128,21)	CKSRYB104K25
C 1966	(A,127,22)	CKSRYB104K25

D

Unit Number : CWS1389
Unit Name : Switch Unit

S 1	Switch(CLOSE)	CSN1051
S 2	Switch(OPEN)	CSN1052

C

Unit Number : CWX3410
Unit Name : CD Core Unit(S10.5COMP1)

MISCELLANEOUS

Circuit Symbol and No.			Part No.
IC 201	(B,39,70)	IC	UPD63763CGJ
IC 203	(A,12,16)	IC	NJM2886DL3-33
IC 301	(A,28,18)	IC	BA5835FP
IC 701	(A,32,48)	IC	PE5565A
Q 101	(B,60,89)	Transistor	2SA1577
Q 701	(B,24,41)	Transistor	UN2111
X 201	(B,28,57)	Ceramic Resonator 16.934 MHz	CSS1603
X 701	(A,24,37)	Ceramic Resonator 4.000 MHz	CSS1652
S 901	(A,57,57)	Switch(HOME)	CSN1067
S 903	(B,23,78)	Switch(DSCSNS)	CSN1067
S 904	(B,42,87)	Switch(12EJ)	CSN1068
S 905	(B,28,88)	Switch(8EJ)	CSN1068

RESISTORS

Circuit Symbol and No.		Part No.
R 101	(B,61,92)	RS1/10SR2R4J
R 102	(B,63,92)	RS1/10SR2R4J
R 103	(B,63,89)	RS1/10SR2R7J
R 104	(A,52,73)	RS1/16SS102J
R 201	(B,44,57)	RS1/16SS102J
R 202	(A,38,62)	RS1/16SS473J
R 203	(A,37,62)	RS1/16SS473J
R 214	(A,46,79)	RS1/16SS472J
R 216	(A,46,81)	RS1/16SS472J
R 221	(A,44,81)	RS1/16SS103J
R 222	(A,45,81)	RS1/16SS103J
R 225	(B,52,78)	RS1/16SS103J
R 226	(B,52,77)	RS1/16SS393J
R 227	(A,44,75)	RS1/16SS562J
R 228	(A,46,72)	RS1/16SS122J
R 229	(A,44,72)	RS1/16SS472J
R 232	(A,46,75)	RS1/16SS122J
R 241	(B,26,63)	RS1/16SS333J
R 243	(B,26,62)	RS1/16SS333J
R 245	(B,26,69)	RS1/16SS333J
R 248	(B,55,74)	RS1/16SS105J
R 307	(A,19,20)	RS1/16SS183J
R 308	(A,17,20)	RS1/16SS183J
R 309	(A,18,18)	RS1/16SS183J
R 310	(A,17,16)	RS1/16SS183J
R 601	(B,30,47)	RS1/16S101J
R 602	(B,28,50)	RS1/16S101J
R 606	(B,20,54)	RS1/16S0R0J
R 701	(B,26,44)	RS1/16SS221J
R 707	(B,32,45)	RS1/16SS473J
R 709	(A,36,35)	RS1/16SS222J
R 710	(B,41,46)	RS1/16SS102J
R 712	(A,45,57)	RS1/16SS222J
R 713	(B,40,57)	RS1/16SS222J
R 716	(B,29,37)	RS1/16SS472J
R 724	(B,31,36)	RS1/16S473J
R 726	(B,23,47)	RS1/16SS103J
R 727	(B,31,42)	RS1/16SS473J
R 729	(B,20,48)	RS1/16SS223J
R 730	(B,20,46)	RS1/16SS473J
R 740	(A,38,59)	RS1/16SS222J
R 746	(A,13,38)	RS1/16SS104J
R 750	(A,40,66)	RS1/16SS473J
R 902	(A,20,36)	RS1/16SS221J
R 905	(A,21,36)	RS1/16SS221J
R 906	(B,20,36)	RS1/16SS221J
R 907	(B,16,62)	RS1/16SS0R0J
R 908	(B,16,64)	RS1/16SS0R0J
R 911	(B,20,32)	RS1/16SS0R0J

CAPACITORS

Circuit Symbol and No.		Part No.
C 103	(B,57,83)	CEVW101M16
C 108	(A,47,66)	CKSSYB104K10
C 201	(B,46,56)	CKSSYB102K50
C 202	(B,47,58)	CKSSYB104K10
C 204	(B,35,48)	CEVW220M6R3
C 205	(A,34,63)	CKSSYB104K10
C 208	(B,34,54)	CKSSYB104K10
C 209	(B,31,57)	CKSSYB104K10
C 210	(A,31,66)	CKSRYB105K10
C 216	(B,53,77)	CKSSYB332K50
C 217	(B,52,79)	CKSSYB104K10
C 218	(B,52,76)	CKSSYB473K10
C 219	(B,52,74)	CKSSYB104K10
C 220	(A,46,77)	CKSSYB182K50
C 221	(B,51,74)	CKSSYB104K10
C 222	(A,46,73)	CCSSCH560J50
C 223	(A,44,74)	CCSSCH4R0C50
C 224	(B,52,68)	CKSSYB104K10
C 225	(A,47,67)	CKSSYB103K16
C 226	(A,49,67)	CCSSCH680J50
C 227	(A,48,65)	CCSSCH470J50
C 228	(A,46,62)	CKSSYB103K16
C 232	(A,12,31)	CKSRYB105K10
C 237	(A,31,67)	CKSSYB104K10
C 239	(A,46,74)	CCSSCH220J50
C 246	(A,42,80)	CKSSYB104K10
C 250	(A,42,81)	CKSRYB102K50
C 251	(A,41,83)	CKSRYB102K50
C 303	(A,18,20)	CKSSYB472K25
C 304	(A,17,17)	CKSSYB223K16
C 307	(A,34,15)	CKSSYB104K10
C 308	(A,17,30)	CKSRYB105K10
C 601	(B,25,50)	CCSRCH102J50
C 602	(B,26,51)	CCSRCH102J50
C 701	(B,25,47)	CKSSYB104K10
C 703	(B,28,42)	CKSSYB103K16
C 706	(B,34,43)	CKSSYB104K10
C 707	(A,36,57)	CKSSYB104K10
C 714	(A,24,41)	CKSSYB104K10
C 722	(B,29,45)	CKSQYB475K6R3
C 903	(B,14,54)	CKSSYB471K50
C 907	(B,14,62)	CKSSYB103K16

Miscellaneous Parts List

	Pickup Unit(P10.5)(Service)	CXX1942
M 1	Motor Unit(SPINDLE)	CXC7134
M 2	Motor Unit(LOADING/CARRIAGE)	CXC4026
M 881	Motor Unit(FLAP)	XXA7400

6. ADJUSTMENT
6.1 DISPLAY TEST MODE

● **Display Test Mode**

TA key : DEH-P75BT/XN/EW5
CLOCK key : DEH-P7850BT/XN/ES

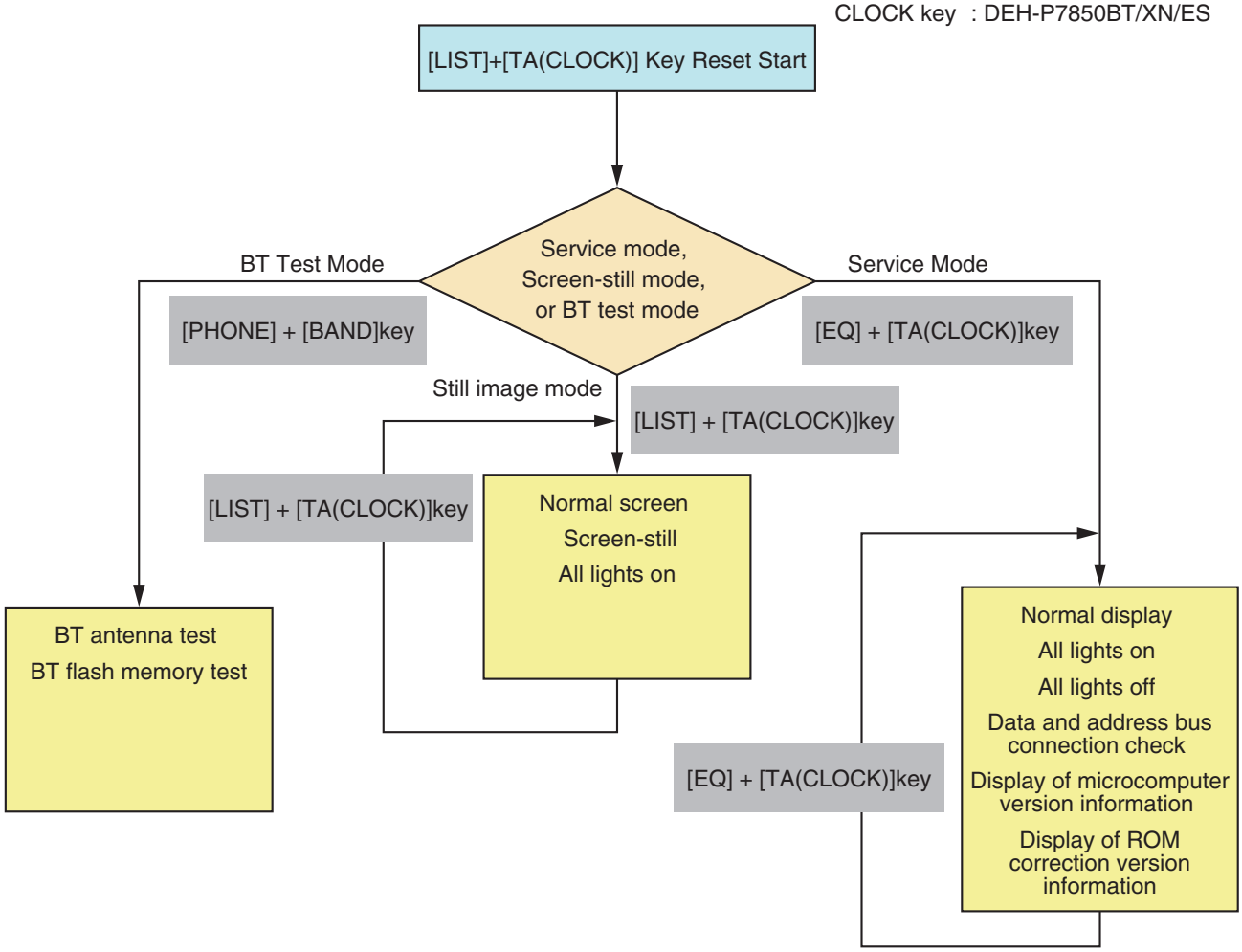

6.2 CD ADJUSTMENT

1) Cautions on adjustments

• In this product the single voltage (3.3V) is used for the regulator. The reference voltage is the REFO1 (1.65V) instead of the GND.
If you should mistakenly short the REFO1 with the GND during adjustment, accurate voltage will not be obtained, and the servo's misoperation will apply excessive shock to the pickup. To avoid such problems:
a. Do not mix up the REFO1 with the GND when connecting the (-) probe of measuring instruments. Especially on an oscilloscope, avoid connecting the (-) probe for CH1 to the GND.
b. In many cases, measuring instruments have the same potential as that for the (-) probe. Be sure to set the measuring instruments to the floating state.
c. If you have mistakenly connected the REFO1 to the GND, turn off the regulator or the power immediately.

• Before mounting and removing filters or leads for adjustment, be sure to turn off the regulator.

• For stable circuit operation, keep the mechanism operating for about one minute or more after the regulator is turned on.

• In the test mode, any software protections will not work. Avoid applying any mechanical or electrical shock to the mechanism during adjustment.

• The RFI and RFO signals with a wide frequency range are easy to oscillate. When observing the signals, insert a resistor of 1k ohms in series.

• The load and eject operation is not guarantied with the mechanism upside down. If the mechanism is blocked due to mistaken eject operation, reset the product or turn off and on the ACC to restore it.

2) Test mode

This mode is used to adjust the CD mechanism module.
• To enter the test mode.
While pressing the EQ and TA(CLOCK) keys at the same time, reset.
• To exit from the test mode.
Turn off the ACC and back up.

Notes:
a. During ejection, do not press any other keys than the EJECT key until the loaded disc is ejected.
b. If you have pressed the (→) key or (←) key during focus search, turn off the power immediately to protect the actuator from damage caused by the lens stuck.
c. For the TR jump modes except 100TR, the track jump operation will continue even if the key is released.
d. For the CRG move and 100TR jump modes, the tracking loop will be closed at the same time when the key is released.
e. When the power is turned off and on, the jump mode is reset to the single TR (91), the RF amp gain is set to 0dB, and the auto-adjustment values are reset to the default settings.

● Flow Chart

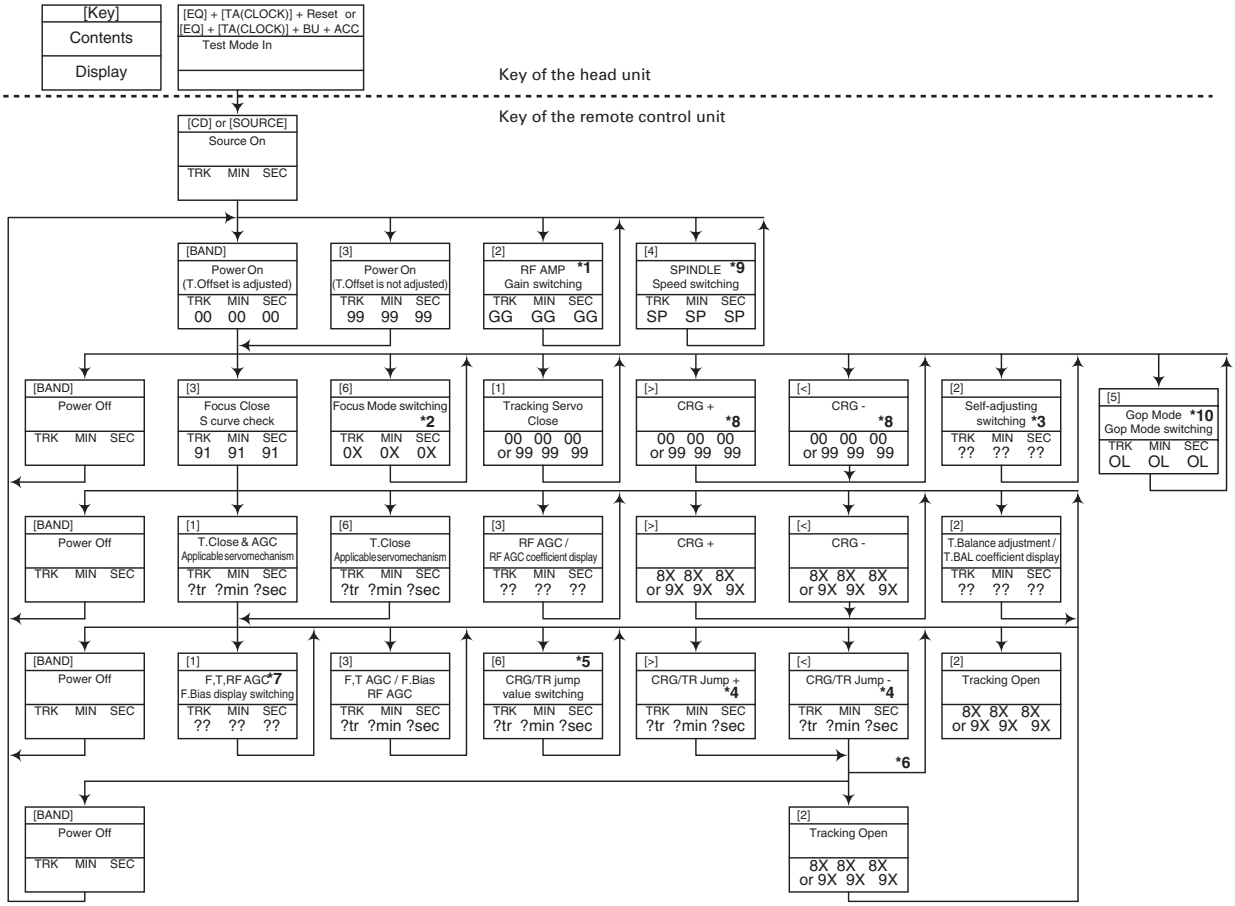

*1) TYP (TRK MIN SEC) → + 6 dB ($^{TRK}06^{MIN}06^{SEC}06$) → + 12 dB ($^{TRK}12^{MIN}12^{SEC}12$)

*2) Focus Close → S Curve check setting → F EQ measurement setting
$^{TRK}00^{MIN}00^{SEC}00$ ($^{TRK}99^{MIN}99^{SEC}99$) $^{TRK}01^{MIN}01^{SEC}01$ $^{TRK}02^{MIN}02^{SEC}02$

*3) F.Offset Display → RF.Offset → T.Offset Display → Switch to the order of the original display

*4) 1TR/4TR/10TR/32TR/100TR

*5) Single → 4TR → 10TR → 32TR → 100TR → CRG Move
9x(8x):91(81) 92(82) 93(83) 94(84) 95(85) 96(86)

*6) Only at the time of CRG move, 100TR jump

*7) TRK/MIN/SEC → F.AGC → T.AGC Gain → F.Bias → RF AGC

*8) CRG motor voltage = 2 [V]

*9) TYP (1X) (TRK MIN SEC) → 2X ($^{TRK}22^{MIN}22^{SEC}22$) → 1X ($^{TRK}11^{MIN}11^{SEC}11$)

*10) OFF(TYP) (TRK MIN SEC) → FORCUS ($^{TRK}70^{MIN}70^{SEC}70$) → TRACKING ($^{TRK}71^{MIN}71^{SEC}71$)

[Key]	Operation Test Mode
[BAND]	Power On/Off
[>]	CRG + / TR Jump + (Direction of the external surface)
[<]	CRG - / TR Jump - (Direction of the internal surface)
[1]	T. CLS & AGC & Applicable servomechanism / AGC,AGC display setting
[2]	RF Gain switching / Offset adjustment display / T.Balance adjustment / T. Open
[3]	F. Close,S Curve / Rough Servo and RF AGC / F,T,RF AGC
[4]	SPDL 1X/2X switching As for the double speed(2x), audio output cannot be supported.
[5]	Error Rate measurement ON : ERR 30Counts Start BER display data[%]
[6]	F. Mode switching / Tracking Close / CRG•TR Jump Switching

• As for the double speed (2x), audio output cannot be supported

*) • After the [Eject] key is pressed keys other than the [Eject] key should not be pressed, until disc ejection is complete.
• When the key [2] or [3] is pressed during the Focus Search, the power supply should be immediately turned off (otherwise the lens sticks to Wall, causing the actuator to be damaged).
• In the case of TR jump other than to 100TR, the function shall continue to be processed even if the TR jump key is released. As for the CRG Move and 100TR Jump, the mechanism shall be set to the Tracking Close mode when the key is released.
• When the power is turned on/off the jump mode is reset to the Single TR (91) while the gain of the RFAMP is reset to 0 dB. At the same time all the self-adjusting values shall return to the default setting.

6.3 CHECKING THE GRATING AFTER CHANGING THE PICKUP UNIT

• **Note :**
The grating angle of the PU unit cannot be adjusted after the PU unit is changed. The PU unit in the CD mechanism module is adjusted on the production line to match the CD mechanism module and is thus the best adjusted PU unit for the CD mechanism module. Changing the PU unit is thus best considered as a last resort. However, if the PU unit must be changed, the grating should be checked using the procedure below.

• **Purpose :**
To check that the grating is within an acceptable range when the PU unit is changed.

• **Symptoms of Mal-adjustment :**
If the grating is off by a large amount symptoms such as being unable to close tracking, being unable to perform track search operations, or taking a long time for track searching.

• **Method :**

• Measuring Equipment	• Oscilloscope, Two L.P.F.
• Measuring Points	• E, F, REFO1
• Disc	• TCD-782
• Mode	• TEST MODE

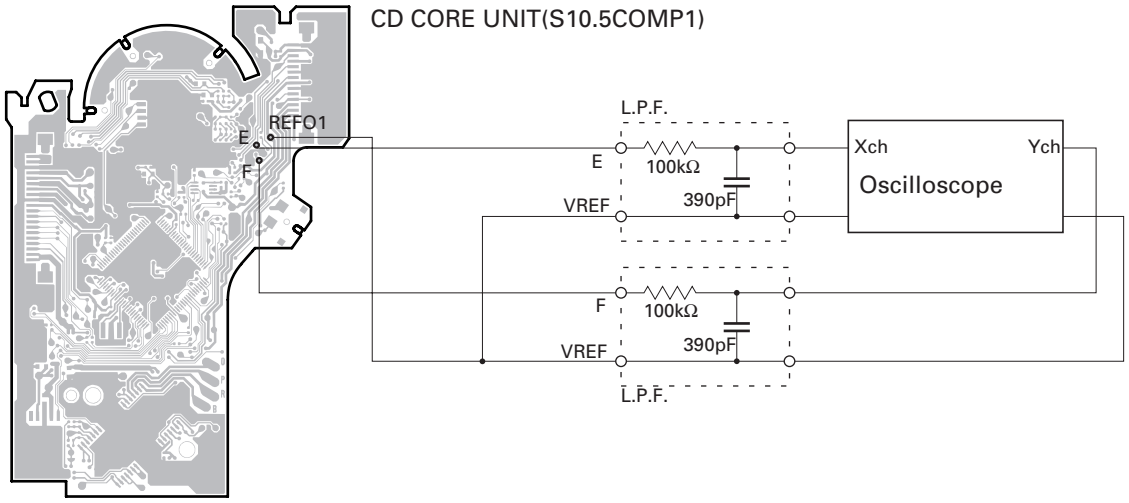

• **Checking Procedure**
1. In test mode, load the disc and switch the 3V regulator on.
2. Using the → and ← buttons, move the PU unit to the innermost track.
3. Press key 3 to close focus, the display should read "91". Press key 2 to implement the tracking balance adjustment the display should now read "81". Press key 3. The display will change, returning to "81" on the fourth press.
4. As shown in the diagram above, monitor the LPF outputs using the oscilloscope and check that the phase difference is within 75° . Refer to the photographs supplied to determine the phase angle.
5. If the phase difference is determined to be greater than 75° try changing the PU unit to see if there is any improvement. If, after trying this a number of times, the grating angle does not become less than 75° then the mechanism should be judged to be at fault.

• **Note**
Because of eccentricity in the disc and a slight misalignment of the clamping center the grating waveform may be seen to "wobble" (the phase difference changes as the disc rotates). The angle specified above indicates the average angle.

• **Hint**
Reloading the disc changes the clamp position and may decrease the "wobble".

Grating waveform

Ech → Xch 20 mV/div, AC
Fch → Ych 20 mV/div, AC

0°

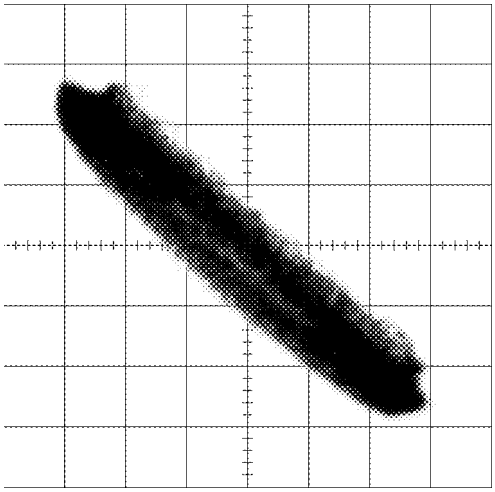

30°

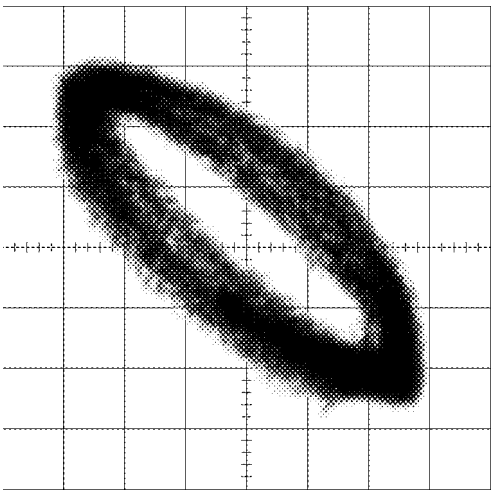

45°

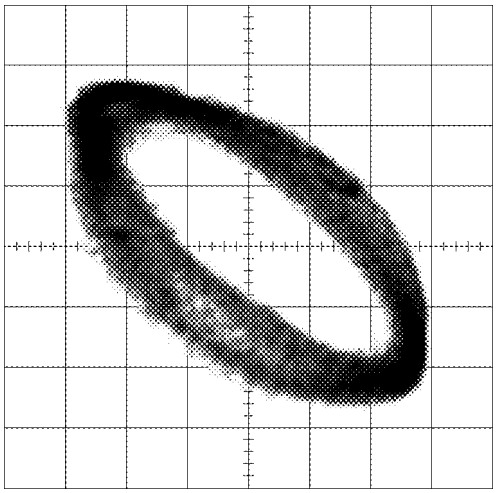

60°

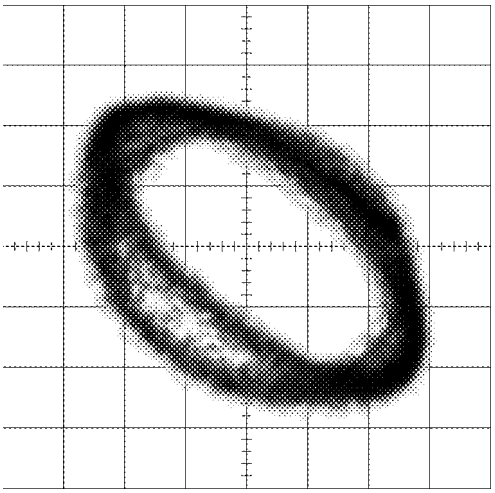

75°

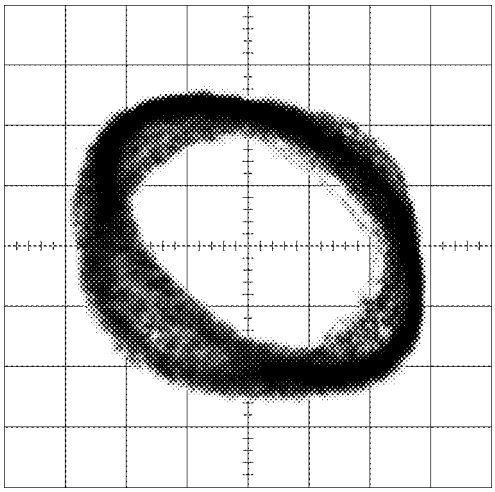

90°

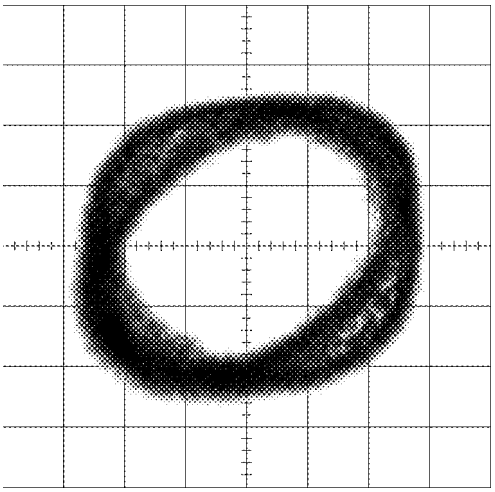

6.4 ERROR MODE

● Error Messages

If a CD is not operative or stopped during operation due to an error, the error mode is turned on and cause(s) of the error is indicated with a corresponding number. This arrangement is intended at reducing nonsense calls from the users and also for facilitating trouble analysis and repair work in servicing.

(1) Basic Indication Method

1) When SERRORM is selected for the CSMOD (CD mode area for the system), error codes are written to DMIN (minutes display area) and DSEC (seconds display area). The same data is written to DMIN and DSEC. DTNO remains in blank as before.

2) Head unit display examples

Depending on display capability of LCD used, display will vary as shown below. xx contains the error number.

8-digit display	6-digit display	4-digit display
ERROR–xx	ERR–xx	E–xx

(2) Error Code List

Code	Class	Displayed error code	Description of the code and potential cause(s)
10	Electricity	Carriage Home NG SERVO LSI Communication Error	CRG can't be moved to inner diameter. CRG can't be moved from inner diameter. → Failure on home switch or CRG move mechanism. Communication error between microcomputer and SERVO LSI.
11	Electricity	Focus Servo NG	Focusing not available. → Stains on rear side of disc or excessive vibrations on REWRITABLE.
12	Electricity	Spindle Lock NG Subcode NG	Spindle not locked. Sub-code is strange (not readable). → Failure on spindle, stains or damages on disc, or excessive vibrations. A disc not containing CD-R data is found. Turned over disc are found, though rarely. CD signal error.
17	Electricity	Setup NG	AGC protection doesn't work. Focus can be easily lost. → Damages or stains on disc, or excessive vibrations on REWRITABLE.
30	Electricity	Search Time Out	Failed to reach target address. → CRG tracking error or damages on disc.
44	Electricity	ALL Skip	Skip setting for all track. (CD-R/RW)
50	Mechanism	CD On Mech Error	Mechanical error during CD ON. → Defective loading motor, mechanical lock and mechanical sensor.
A0	System	Power Supply NG	Power (VD) is ground faulted. → Failure on SW transistor or power supply (failure on connector).

Remarks: Mechanical errors are not displayed (because a CD is turned off in these errors).

Unreadable TOC does not constitute an error. An intended operation continues in this case.

Upper digits of an error code are subdivided as shown below:

1x: Setup relevant errors, 3x: Search relevant errors, Ax: Other errors.

6.5 BLUETOOTH TEST MODE

● About Memory Clear

When resetting the microprocessor, the memory is initialized except for the following four items.
This enables user to avoid the task of registering phones and transfering phone directory again even after resetting system at the time of battery exchange, etc.

- Registration of phone
- Phone directory
- History of sending/arrival
- Dial preset

Resetting the microprocessor

The microprocessor must be reset under the following conditions:

- Prior to using this unit for the first time after installation
- If the unit fails to operate properly
- When strange or incorrect messages appear on the display

● Press RESET with a pen tip or other pointed instrument.

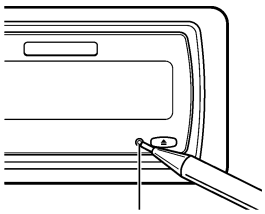

RESET button

Clearing all memory

To protect personal and private information, data about the phone stored in this unit can be deleted.

1 Press SOURCE and hold until the unit turns off.

2 Press MULTI-CONTROL and hold until Language select appears in the display.

3 Turn MULTI-CONTROL to select Phone reset.
Phone reset appears in the display.

4 Push MULTI-CONTROL right to show a confirmation display.
Clear memory YES is displayed. Clearing memory is now on standby.

▪ If you do not want to reset phone memory, press **BAND**.

5 Press MULTI-CONTROL to clear the memory.
All data in the telephone source, including Phone Book entries, number presets and the Call History is cleared.

● Function Specifications for Bluetooth Test Mode (when using BT-compliant mobile phone)

Specifications for BT Built-in mobile phone

The mobile phone compliant to Bluetooth Ver 1.1 requires at least *HFP and *OPP to be mounted.
The model having validly accomplished connecting verification is desirable.
The model capable of being in standby state is desirable.
*HFP : **H**ands-**F**ree **P**rofile, OPP : **O**bject **P**ush **P**rofile

1. Cautions

[Important]
* When conducting this Test Mode, writing into memory and others will be checked. Because of that, the data stored by the user will be deleted. Please obtain approval from the user beforehand.

* On this product, the user's memory for telephone directory information will not be cleared even if BU power is turned off. If you register the telephone information to the unit in normal mode for checking the Bluetooth function, you have to delete the data which you registered before returning the unit to the user.

* Note that if the user is already useing all of user's memory(No.1 - 3 and Guest 1,2), you need to delete user's data in order to check the Bluetooth function in normal mode.

2. Outline of Functions

The following 3 items are to be confirmed for the simple BT action check by using BT-compliant mobile phone:
- Confirmation of Bluetooth connection (certification connection and voice connection)
- Confirmation of BT antenna sensitivity (connection)
- Confirmation of FLASH memory action

3. Configuration Diagram

DEH-P75BT/XN/EW5, DEH-P7850BT/XN/ES

Bluetooth

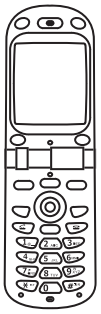

4. How to Start-up the Test Mode

Specifications for Operation

Operation Method	
RESET start while pressing TA (CLOCK) + LIST. ↓	
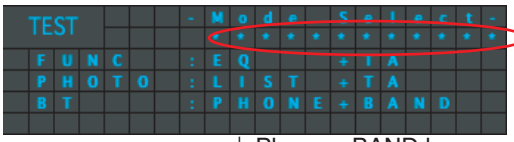	DEH device name is displayed. *In case the test is conducted as destined for ES, TA → CLOCK will be displayed.
↓ Phone + BAND key	
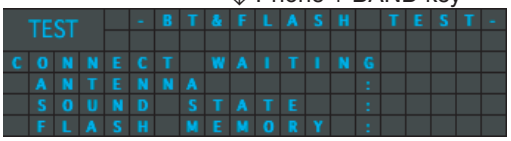	Standby for connection from the device (mobile phone, etc.) Connection from DEH to the device cannot be made.
↓ Device connection completed	
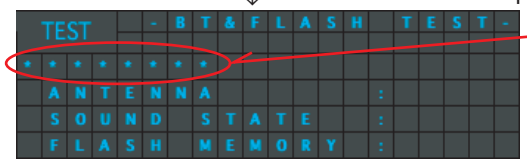	Device name is displayed. When the connection is completed, the name of the connected device will be displayed. (MAX 12 one-byte characters) ANTENNA is checked automatically.
↓ ANTENNA check complete (automatic)	
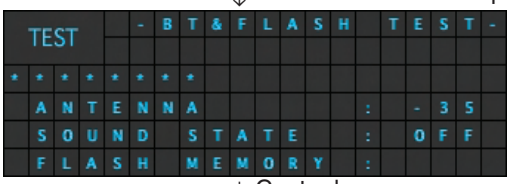	The result of ANTENNA check is displayed. The value is only a guideline. The ANTENNA level displayed is -80 to -18. If an ANTENNA value outside of the range is displayed after connection,check the condition of the unit and try from the beginning again.
↓ Center key	
	SKIP the following two items by pressing the Center key as they are the ones checked at the time of manufacturing.
↓ Center key	
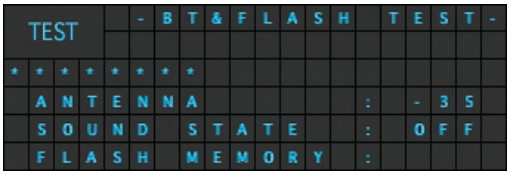	
↓ Center key	
	Start FLASH check.
↓ FLASH check complete	
	FLASH check is conducted automatically according to the following steps. Delete → Write → Read → Totally delete → Read Read out the written data, and verify that both of them match. Read out after total delete, and verify that the deletion has been accomplished. Verification is OK if OK is displayed. Test is complete if everything progressed normally up to this point.

● Function Specifications for Bluetooth Test Mode (when using 2.4 GHz-compliant spectrum analyzer)

1. Cautions

* When the service site has a 2.4 GHz-compliant spectrum analyzer, the peripheral facilities shown below are also required.
  Also, the antenna terminal on BT unit must be directly connected to the cable.
  A white coaxial cable connected to the antenna connector on BT unit is removed by taking out the upper case and CD mechanics of the product.
  This task would be safer if a special connector-drawing jig is available.
  Next, the U.FL connector from spectrum analyzer is connected. The styling of cable must be taken good care so as not to add further burden on BT antenna connector and to break it.

2. Outline of Functions

The following confirmation is to be conducted by test mode in order to simply check BT actions using 2.4 GHz-compliant spectrum analyzer.

* Confirmation of output level of Bluetooth unit

3. Configuration Diagram

2.4 GHz-compliant spectrum analyzer

DEH-P75BT/XN/EW5, DEH-P7850BT/XN/ES

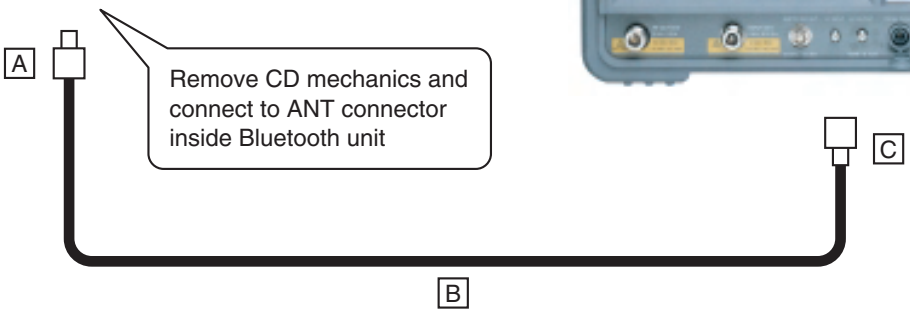

A: U.FL-SMA conversion adapter
(Hirose Electric Co., Ltd CL311-0301-5)
B: Coaxial cable for SMA microwave
(Stack Electronics Co., Ltd. SMA・P-100-STF358)
C: SMA conversion connector
(Stack Electronics Co., Ltd. BA057)

4. How to Start-up the Test Mode

Specifications for Operation

Operation Method

Reset while pressing EQ+TA (CLOCK).
(Enter into "all sources test mode").

↓

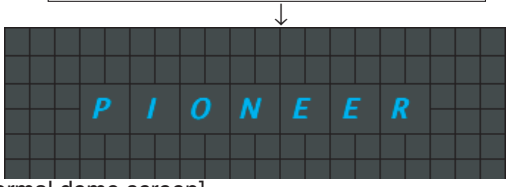

[Normal demo screen]

↓ Press Phone key.

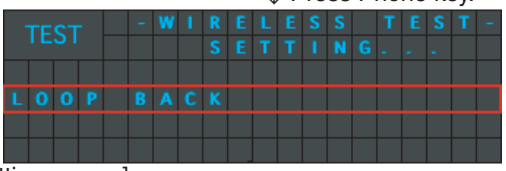

→Set to "LOCAL TX NM" by pressing the left/right key.

[Setting screen]

↓ Press the left/right key.

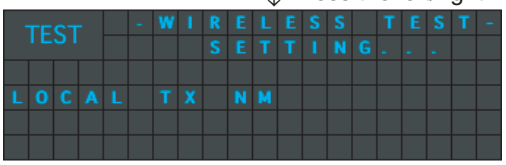

[Local TX NM setting]

↓ Press the Center key.

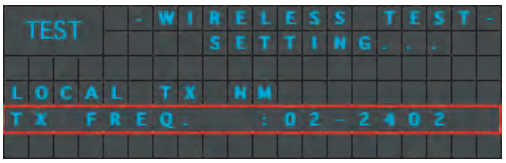

→Select the frequency by pressing the up/down key.
02-2402 (Initial value)↔41-2441↔80-2480↔95-2495
Measurement shall be taken at 02, 41 and 80.

[Local TX NM detail setting]

↓ Center key

→Return to the Local TX NM setting screen by pressing the BAND key.

[When executing Local TX NM]

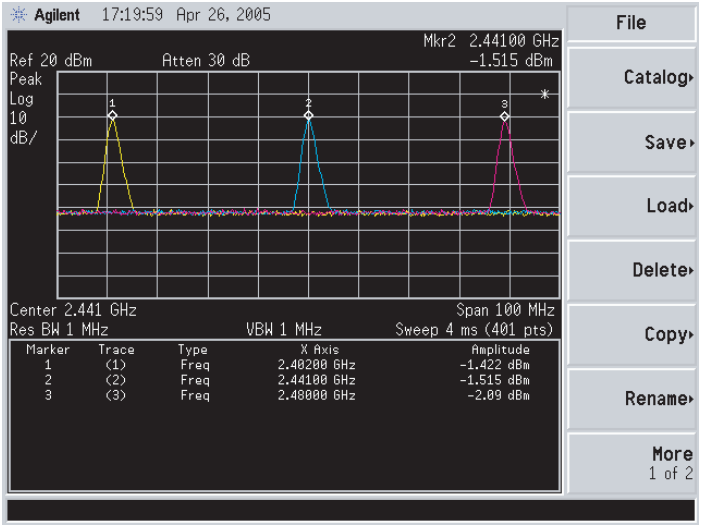

As per above, measure output level of each frequency with spectrum analyzer upon connection.
A standard of judgment should be within the following range of output level V.
"-6 dBm < V < 4 dBm"

6.6 SYSTEM MICROCOMPUTER TEST PROGRAM

● PCL Output

In the normal operation mode (with the detachable panel installed, the ACC switched ON, the standby mode cancelled), shift the STEST IC601(Pin 86) terminal to H.
The clock signal is output from the PCL1 terminal IC601(Pin 41).
The frequency of the clock signal is 625.000 kHz that is one 32th of the fundamental frequency.
The clock signal should be 625.000 kHz(- 25 Hz, + 25 Hz).
If the clock signal is out of the range, the X'tal (X601) should be replaced with new one.

7. GENERAL INFORMATION

7.1 DIAGNOSIS

7.1.1 DISASSEMBLY

● Removing the Case (not shown)

1. Remove the Case.

● Removing the CD Mechanism Module (Fig.1)

1 Remove the four screws.

Disconnect the connector and then remove the CD Mechanism Module.

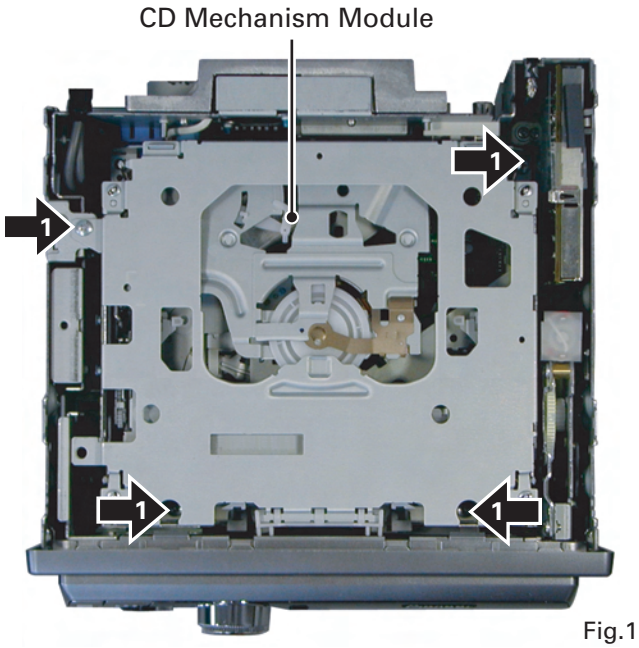

Fig.1

● Removing the Cord Assy (Fig.2)

1 Disconnect the Cord Assy by Jig GGF1539.

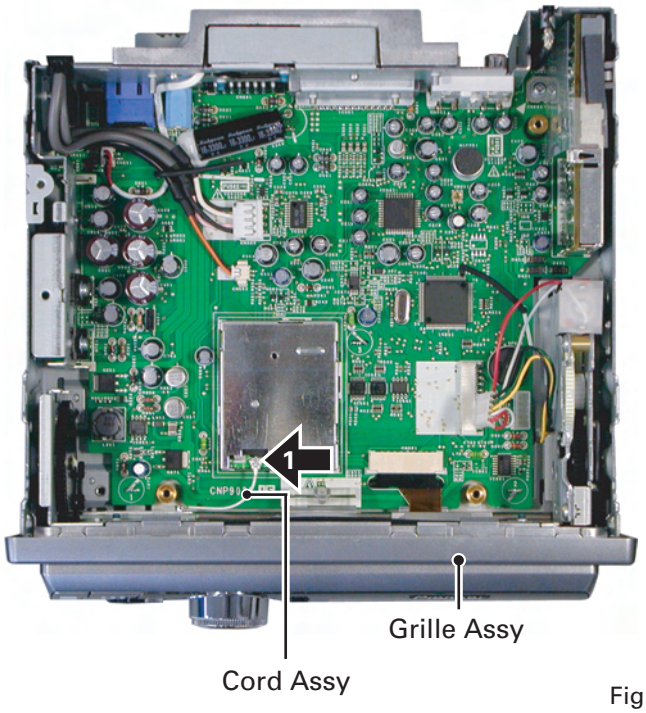

Fig.2

When unplugging the cord assy, make sure to use jig GGF1539.
If the antenna cable is directly unplugged without using jig GGF1539, you might damage your fingertip or fingernail.

● How to Remove the Cord Assy

When unplugging cord assy, hook the point of jig GGF1539 on the lid of cord assy and vertically draw out along with the engagement axis of connector.

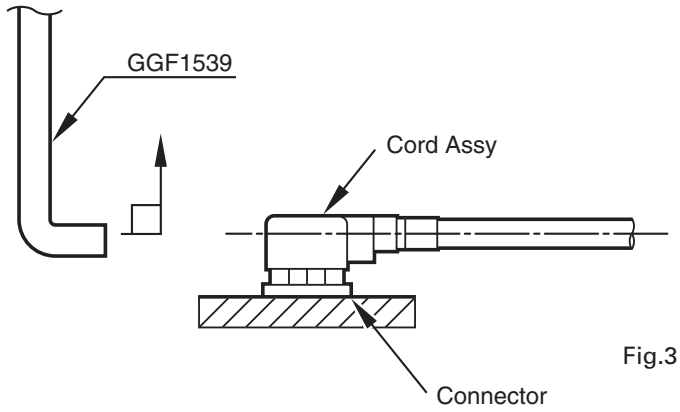

Fig.3

● How to Attach the Cord Assy

For inserting cord assy, adjust cord assy with the engagement axis of connector and insert it as vertically as possible.
Do not insert the cord assy in extreme slant, as the connector might suffer damage.

● Removing the Grille Assy (Fig.4)

1 Remove the four screws.

Disconnect the connector and then remove the Grille Assy.

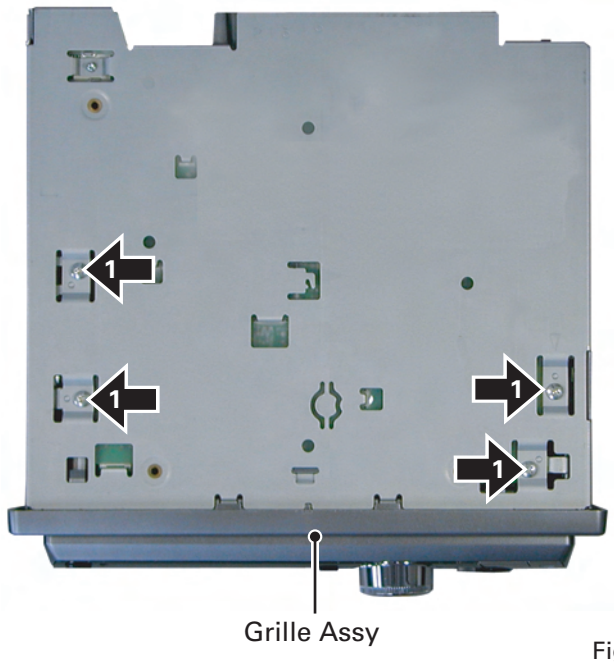

Fig.4

● Removing the Tuner Amp Unit (Fig.5)

1 Remove the three screws.

2 Straighten the tabs at three locations indicated.

3 Remove the screw and then remove the Tuner Amp Unit.

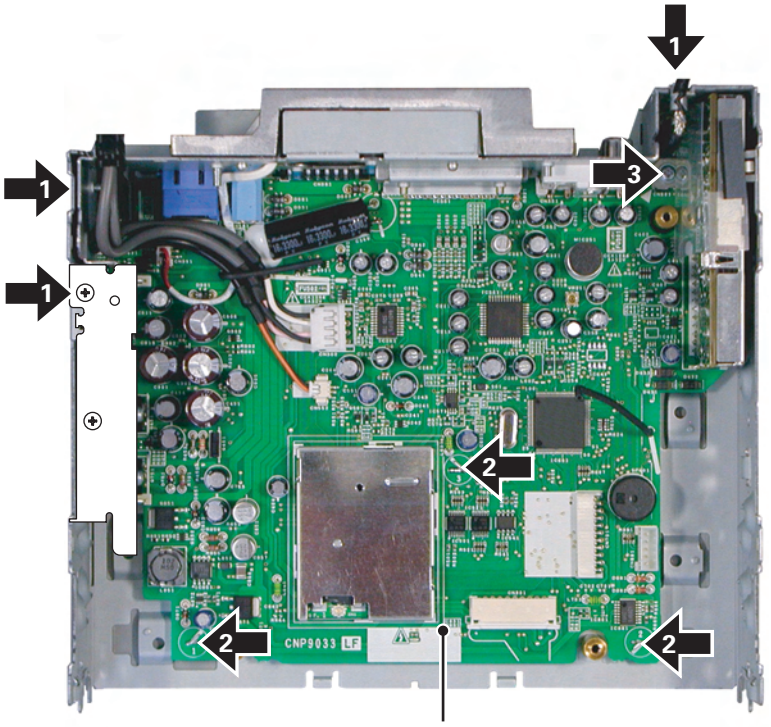

Fig.5

● How to hold the Mechanism Unit

1. Hold the Upper and Lower Frames.
2. Do not hold the front portion of the Upper Frame, because it is not very solid.

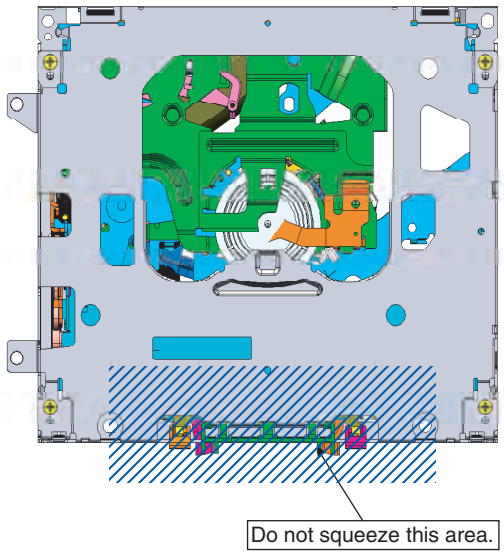

● Removing the Upper and Lower Frames

1. With a disc inserted and clamped in the mechanism, remove the two Springs (A), the six Springs (B), and the four Screws.
2. Turn the Upper Frame using the part "a" as a pivot, and remove the Upper Frame.
3. While lifting the Carriage Mechanism, remove it from the three Dampers.

Caution: When assembling, be sure to apply some alcohol to the Dampers and assemble the mechanism in a clamped state.

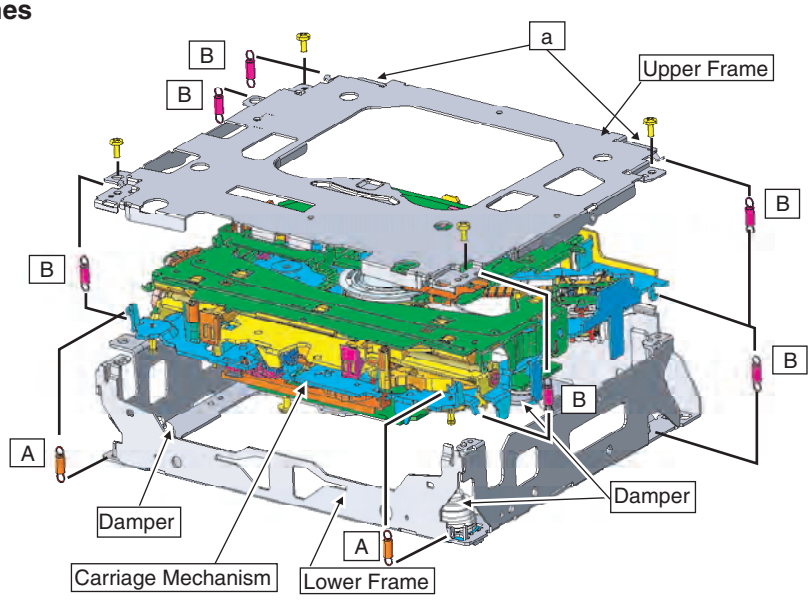

● How to remove the CD Core Unit

1. Apply Shorting Solder to the flexible cable of the Pickup, and disconnect it from the connector.
2. Unsolder the four leads, and loosen the Screw.
3. Remove the CD Core Unit.

Caution: When assembling the CD Core Unit, assemble it with the SW in a clamped state so as not to damage it.

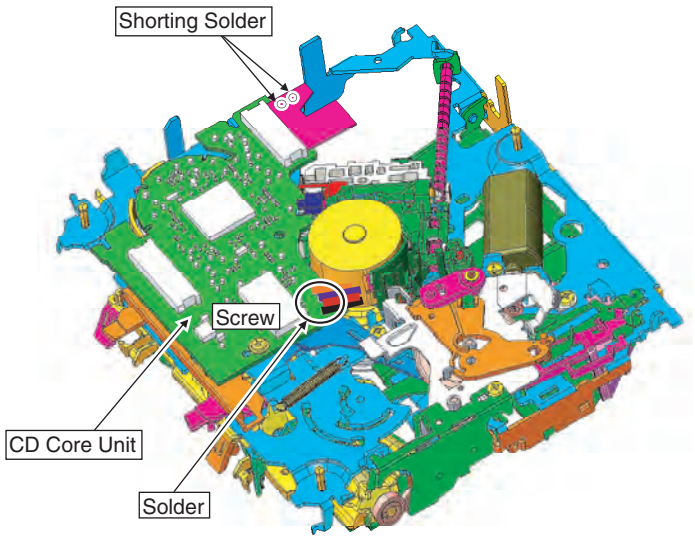

● How to remove the Pickup Unit

1. Make the system in the carriage mechanism mode, and have it clamped.
2. Remove the CD Core Unit and remove the leads from the Inner Holder.
3. Remove the Poly Washer, Change Arm, and Pickup Lock Arm.
4. While releasing from the hook of the Inner Holder, lift the end of the Feed Screw.

Caution: When assembling, move the Planet Gear to the load/eject position before setting the Feed Screw in the Inner Holder.
Assemble the sub unit side of the Pickup, taking the plate (Chassis) in-between. When treating the leads of the Load Carriage Motor Assy, do not make them loose over the Feed Screw.

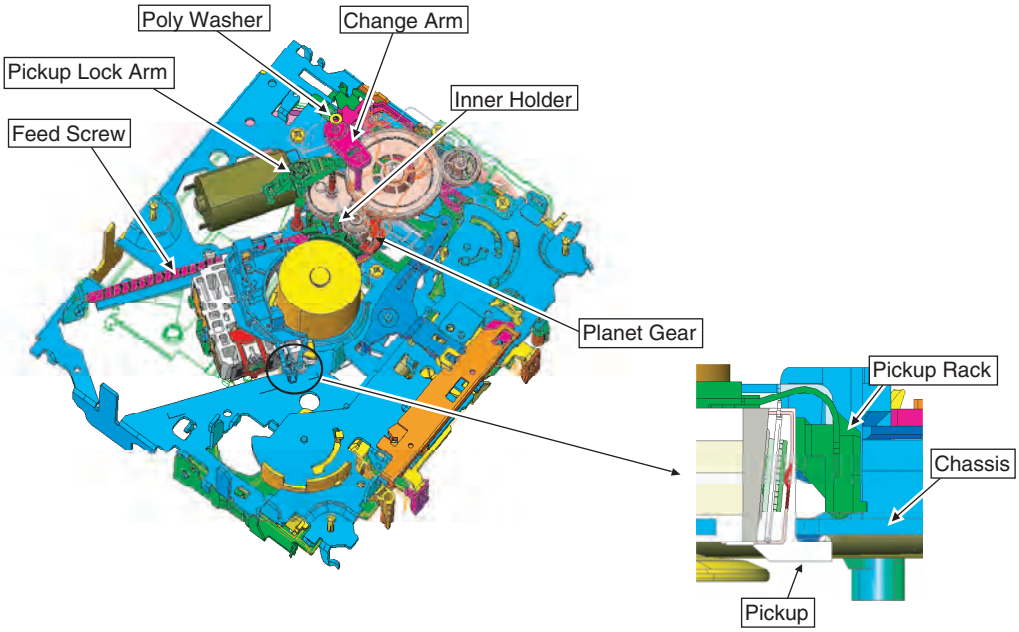

7.1.2 CONNECTOR FUNCTION DESCRIPTION

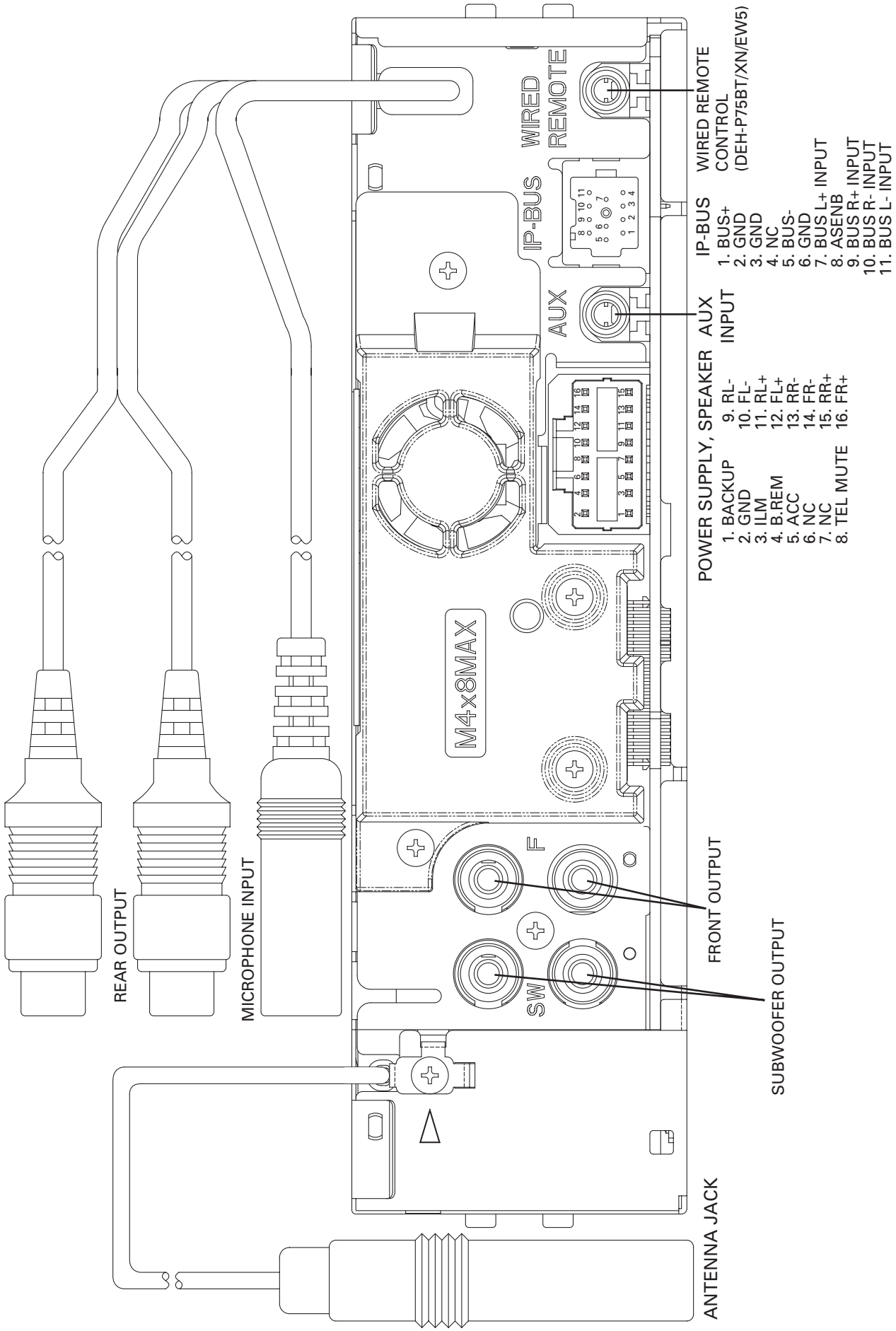

7.2 IC

UPD63763CGJ	GP1UX31RK	TC74VHCT08AFTS1	TC7PAU04FU
PE5565A	HA12241FP	TC74VHC08FTS1	AN6123MS
NJM2886DL3-33	PAL007B	PEG262A	AK2301A
PEG168A	PML016B	PEG263A	
PD8158A	S99-50084	TC74VHC02FTS1	

● Pin Functions (UPD63763CGJ)

Pin No.	Pin Name	I/O	Function and Operation
1	D.VDD		Power supply for digital circuits
2	D1.GND		Ground for 1.6 V digital circuits
3	$\overline{\text{RESET}}$	I	Input of reset
4-8	AB12-8	I	Address bus 12-8 from the microcomputer
9-16	AD7-0	I/O	Address/data bus 7-0 to the microcomputer
17	$\overline{\text{CS}}$	I	Chip selection
18	ASTB	I	Address strobe
19	$\overline{\text{READ}}$	I	Control signals(read)
20	$\overline{\text{WRITE}}$	I	Control signals(write)
21	$\overline{\text{WAIT}}$	O	Control signals(wait)
22	INTQ	O	Interruption signals to the external microcomputer
23,24	IFMODE0,1	I	Switching the microcomputer I/F 0, 1
25	D1.VDD		Power supply for 1.6 V digital circuits
26	DA.VDD		Power supply for DAC
27	ROUT	O	Output of audio for the right channel
28	DA.GND		Ground for DAC
29	REGC		Connected to the capacitor for band gap
30	DA.GND		Ground for DAC
31	LOUT	O	Output of audio for the left channel
32	DA.VDD		Power supply for DAC
33	X.VDD		Power supply for the crystal oscillator
34	XTAL	I	Connected to the crystal oscillator(16.9344 MHz)
35	$\overline{\text{XTAL}}$	O	Connected to the crystal oscillator(16.9344 MHz)
36	X.GND		Ground for the crystal oscillator
37	VDDREG15		Control of 1.6 V regulator
38	PWMSW0	I	Setup 0 for PWM output(SD, MD)
39-41	TEST3-1	I	Connected to Ground
42	PWMSW1	I	Setup 1 for PWM output(FD, TD)
43	TESTEN	I	Connected to Ground
44	D1.GND		Ground for 1.6 V digital circuits
45	DIN	I	Input of audio data
46	DOUT	O	Output of audio data
47	SCKIN	I	Clock input for audio data
48	SCKO	O	Clock output for audio data
49	LRCKIN	I	Input of LRCK for audio data
50	LRCK	O	Output LRCK for audio data
51	$\overline{\text{XTALEN}}$	I	Permission to oscillate 16.9344 MHz
52	D1.VDD		Power supply for 1.6 V digital circuits
53	RFCK/HOLD	O	Output of RFCK/HOLD signal
54	WFCK/MIRR	O	Output of WFCK/MIRR signal
55	PLCK/RFOK	O	Output of PLCK/Output of RFOK
56	LOCK/RFOK	O	Output of LRCK/Output of RFOK
57	C1D1/C8M/(RA13)	O	Information on error correction/C8M : 8 MHz
58	C1D2/C16M/(RA12)	O	Information on error correction/C16M : 16 MHz
59	C2D1/RMUTE	O	Information on error correction/Mute for Rch
60	C2D2/LMUTE	O	Information on error correction/Mute for Lch
61	C2D3/SHOCK	O	Information on error correction/Detection of vibration
62	D1.GND		Ground for 1.6 V digital circuits
63	C33M	O	Output of 33.8688 MHz(CLK for SDRAM)
64	($\overline{\text{RCS}}$)	O	DRAM $\overline{\text{CS}}$
65	RA11	O	Output of DRAM address 11
66	(CKE)	O	Output of DRAM CKE
67	$\overline{\text{RAS}}$	O	Output of DRAM $\overline{\text{RAS}}$
68	$\overline{\text{CAS0}}$(LDQM)	O	Output of DRAM lower $\overline{\text{CAS}}$(LDQM)
69	$\overline{\text{CAS1}}$(UDQM)	O	Output of DRAM upper $\overline{\text{CAS}}$(UDQM)

Pin No.	Pin Name	I/O	Function and Operation
70	$\overline{WE}$	O	Output of DRAM $\overline{WE}$
71	$\overline{OE}(\overline{CAS})$	O	Output of DRAM $\overline{OE}(\overline{CAS})$
72	D.GND		Ground for digital circuits
73-88	RDB0-15	I/O	Input/output of DRAM data0-15
89-99	RA0-10	O	Output of DRAM address0-10
100	D.VDD		Power supply for digital circuits
101	FD+	O	Output of focus drive PWM +
102	FD-	O	Output of focus drive PWM -
103	TD+	O	Output of tracking drive PWM +
104	TD-	O	Output of tracking drive PWM -
105	SD+	O	Output of thread drive PWM +
106	SD-	O	Output of thread drive PWM -
107	MD+	O	Output of spindle drive PWM +
108	MD-	O	Output of spindle drive PWM -
109	REFOUTSV	O	REFOUT for servo
110	AD.VDD		Power supply for ADC
111	EFM	O	Output of EFM signals
112	ASY	I	Input of asymmetry
113	ATEST	O	Analog tests
114	RFI	I	Input of RF
115	AD.GND		Ground for the analog system
116	AGCO	O	Output of RF
117	C3T	O	Connection to the capacitor for detecting 3T
118	AGCI	I	Input of AGC
119	RFO	O	Output of RF(AGC)
120,121	EQ2,1	I	Equalizer 2, 1
122	RF2-	I	Reversal input of RF2
123	RF-	I	Reversal input of RF
124	A.GND		Ground for the analog system
125	A	I	Input of A
126	C	I	Input of C
127	B	I	Input of B
128	D	I	Input of D
129	F	I	Input of F
130	E	I	Input of E
131	VREFIN	I	Input of reference voltage
132	A.VDD		Power supply for the analog system
133	REFOUT	O	Output of reference voltage
134	REFC	I	Connected to the capacitor for output of REFOUT
135	FE-	I	Reversal input of FE
136	FEO	O	Output of FE
137	ADIN	I	Input of FE, TE A/D converter
138	TE-	I	Reversal input of TE
139	TEO	O	Output of TE
140	TE2	O	TE2
141	TEC	I	TEC
142	LD	O	Output of LD
143	PD	I	Input of PD
144	D.GND		Ground for digital circuits

UPD63763CGJ

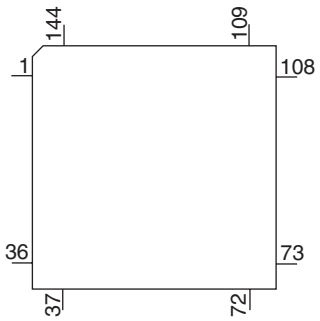

● Pin Functions (PE5565A)

Pin No.	Pin Name	I/O	Format	Function and Operation
1	AVREF			A power supply / Positive power supply(5V)
2	AVSS			A power supply GND
3	$\overline{\text{TESTIN}}$	I		Chip check test program starting input
4	CLAMP			Not used
5	EVDD			E power supply / Positive power supply
6	FMODE			For flash rewriting / L : flash rewriting mode
7	FLRQ			For flash rewriting / Reset voltage control
8	IC/FLMD0			IC : VSS direct connection/FLMOD0 : Pull-down
9	VDD			Positive power supply(5V)
10	REGC			Connected to the capacity stabilizing output of the regulator
11	VSS			GND
12	X1	I		Oscillator connection for mainclock
13	X2			Oscillator connection for mainclock
14	$\overline{\text{RESET}}$	I		System reset input
15	XT1	I		Connected to the oscillator for subclock(connected to VSS via the resistor)
16	XT2			Connected to the oscillator for subclock(Open)
17	PULLDOWN	I		Connected to EVDD or EVSS via the resistor
18	$\overline{\text{EJSW}}$			Not used
19	$\overline{\text{XINT}}$	I	C	CD LSI interruption signal input
20	NC			Not used
21	$\overline{\text{BRST}}$	I		Bus reset input
22	BSI	I		Bus serial data input
23	BSO	O	C	Bus serial data output
24	$\overline{\text{BSCK}}$	I/O	/C	Bus serial clock input/output
25	FTxD	O	C	For flash rewriting(transmitted signal)
26	FRxD	I		For flash rewriting(received signal)
27	BRXEN	I/O	/C	Bus RX enable input/output
28	$\overline{\text{BSRQ}}$	I/O	/C	Bus serial clock input/output
29	$\overline{\text{DSPOK}}$			Not used
30	DSCSNS	I	C	Disc state sense input
31	8EJ(S905)	I	C	input of detection of 8 cm disc ejection
32	12EJ(S904)	I	C	input of detection of 12 cm disc ejection
33	EVSS			E power supply GND
34	EVDD			E power supply / Positive power supply
35,36	SRAMLEVEL0,1	O		SRAM level meter output
37	EMPH	O	C	Emphasis information output
38	$\overline{\text{EMPH}}$			Not used
39	CDMUTE			Not used
40	LOEJ			Not used
41	CLCONT	O		Driver input switching output
42	HOME	I		Home SW sense input
43	$\overline{\text{ADENA}}$	O	C	A/D reference voltage supply control output
44	LRCKOK	O	C	(DOUT mute output)
45	SRAMLEVEL2	O	C	SRAM level meter output
46	CD3VON(MCKRQ)	O	C	CD + 3.3 V power supply control output(Digital output : MCKRQ)
47	CONT	O	C	Servo driver power supply control output
48	$\overline{\text{XRST}}$	O	C	CD LSI reset control output
49	VDCONT	O	C	VD power supply control output
50	$\overline{\text{XSI}}$	I		CD LSI serial data input
51	$\overline{\text{XSO}}$	O	C	CD LSI serial data output
52	$\overline{\text{XCK}}$	O	C	CD LSI serial clock output
53	$\overline{\text{XWAIT}}$	I	C	CD LSI wait control signal input
54	XASTB	O	C	CD LSI address strobe output
55	AD0	O	C	Address/data Bus 0
56	INT			Not used

Pin No.	Pin Name	I/O	Format	Function and Operation
57	ROMDATA	I/O		E2PROM data input/output
58	ROMCK	O		E2PROM clock output
59	ROMCS	O	C	E2PROM chip selection output
60,61	NC			Not used
62	CLKOUT			Not used
63	LOCK	I		Spindle lock input
64-68	NC			Not used
69	BVSS			B power supply GND
70	BVDD			B power supply / Positive power supply
71-75	NC			Not used
76	FLMD1	I/O	/C	Address/Data Bus 5
77-90	NC			Not used
91-93	A/D			Not used
94	$\overline{\text{CSENS}}$			Not used
95	TYPE_A/D			Not used
96,97	NC			Not used
98	TEMP			Not used
99	VDSENS	I		VD power supply short sense input
100	DSCSNS			Not used

PE5565A

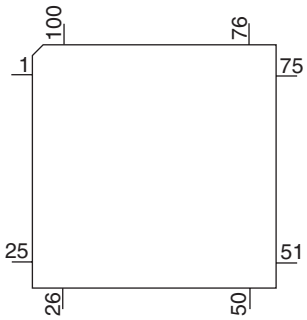

Format	meaning
C	C MOS

NJM2886DL3-33

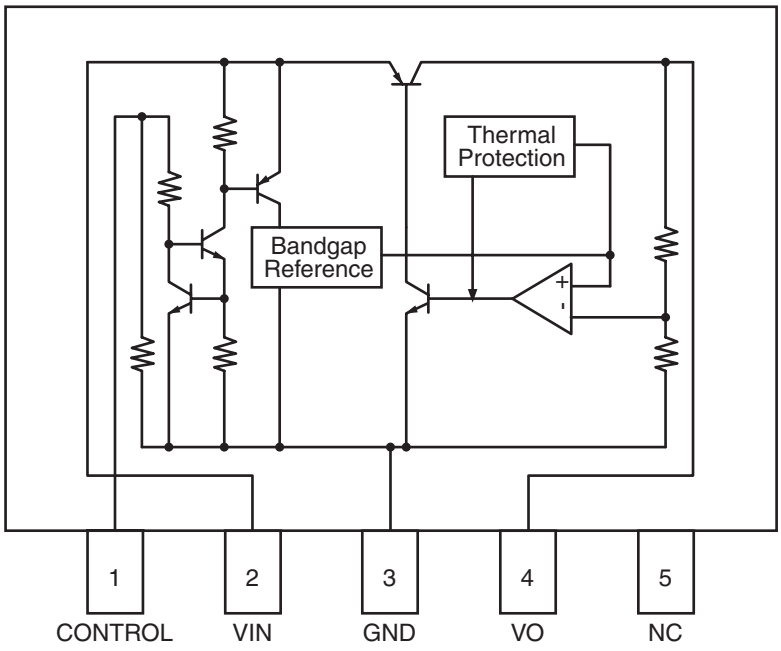

● Pin Functions (PEG168A)

Pin No.	Pin Name	I/O	Function and Operation
1	BTLED	O	Bluetooth attestation LED output
2	ROMDT	I/O	ROM data input/output
3	ROMCK	I	ROM clock input
4	REM	I	Remote control input
5	ROMCS		ROM chip select
6	BYTE		GND
7	CNVSS		GND
8,9	NC		Not used
10	$\overline{\text{RESET}}$	I	Reset input
11	XOUT	O	Main clock output
12	VSS1		VSS
13	XIN	I	Main clock input
14	VCC1		VCC
15	$\overline{\text{NMI}}$	I	NMI input
16	NC		Not used
17-20	$\overline{\text{KS3}}$-$\overline{0}$	I/O	Key strobe input/output
21	NC		Not used
22	D_SEL		Data select
23	NC		Not used
24	CKD	O	Data transfer and a driver operation clock output
25	NC		Not used
26	LS	O	Line sink signal output
27	DPDT	I	Display data communication input
28	KYDT	O	Key data communication output
29-32	NC		Not used
33	OELD	O	Display data output
34	NC		Not used
35	CLK0	I	Clock input for UART1
36	NC		Not used
37	$\overline{\text{RDY}}$		(Pull up)
38	NC		Not used
39	$\overline{\text{HOLD}}$		(Pull up)
40,41	NC		Not used
42	$\overline{\text{RD}}$	O	Read strobe output
43,44	NC		Not used
45,46	BANK2,1	O	Bank address output
47	NC		Not used
48	$\overline{\text{CS0}}$		ROM chip select
49-59	A19-9	O	Address bus output
60	VCC2		VCC
61	A8	O	Address bus output
62	VSS2		VSS
63-70	A7-0	O	Address bus output
71-86	D15-0	I/O	Data bus input/output
87	NC		Not used
88	JOYST	I	Joystick input
89,90	NC		Not used
91-93	$\overline{\text{KD3}}$-$\overline{1}$	I	Key data input
94	AVSS		VSS
95	$\overline{\text{KD0}}$	I	Key data input
96	VREF		VSS
97	AVCC		VCC
98-100	NC		Not used

PEG168A

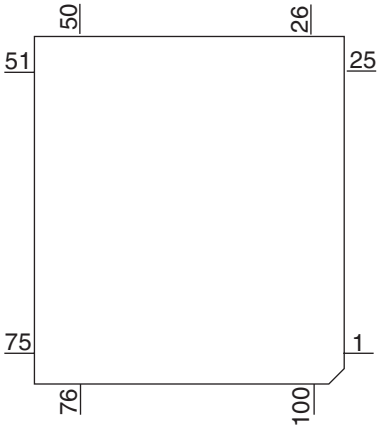

PD8158A

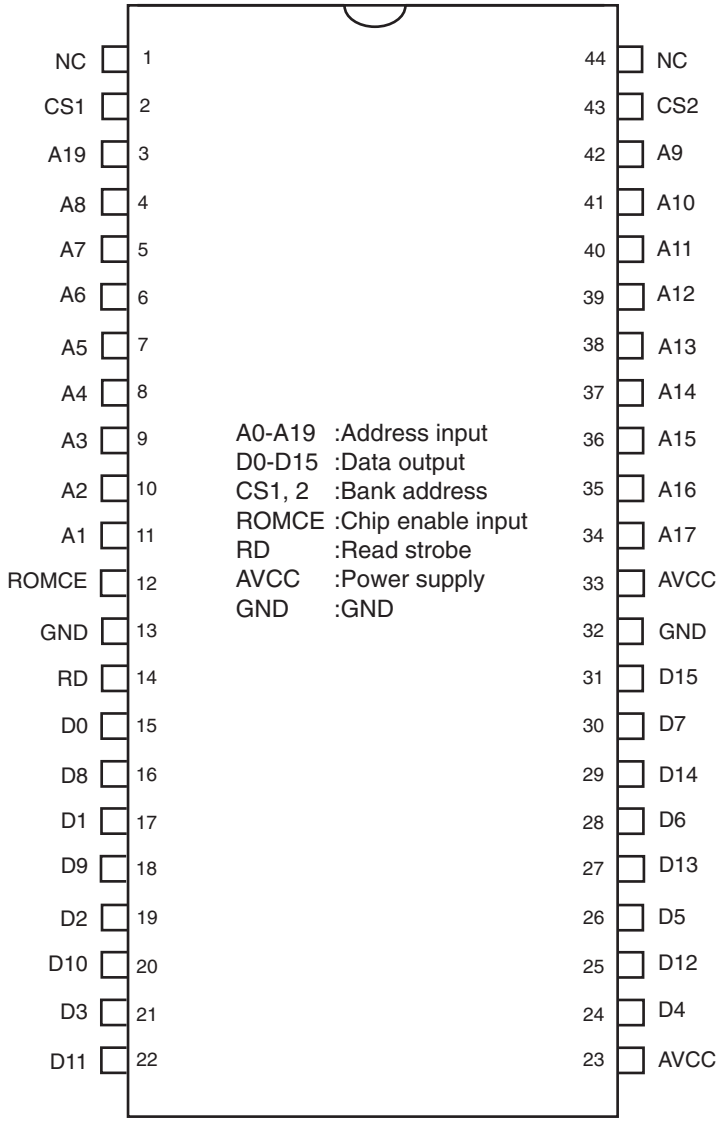

GP1UX31RK

● **Block Diagram**

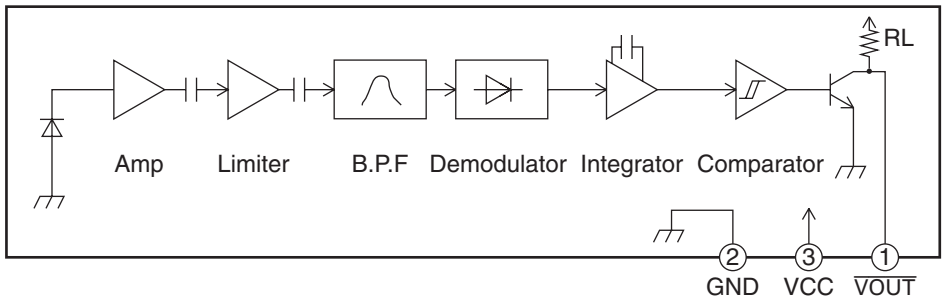

● **Pin Layout**

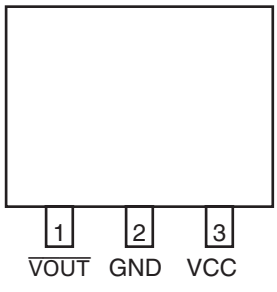

HA12241FP

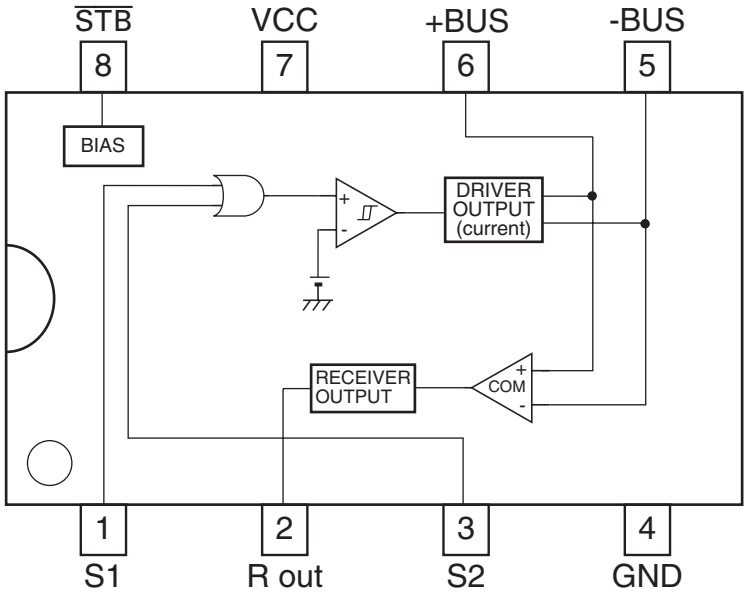

PAL007B

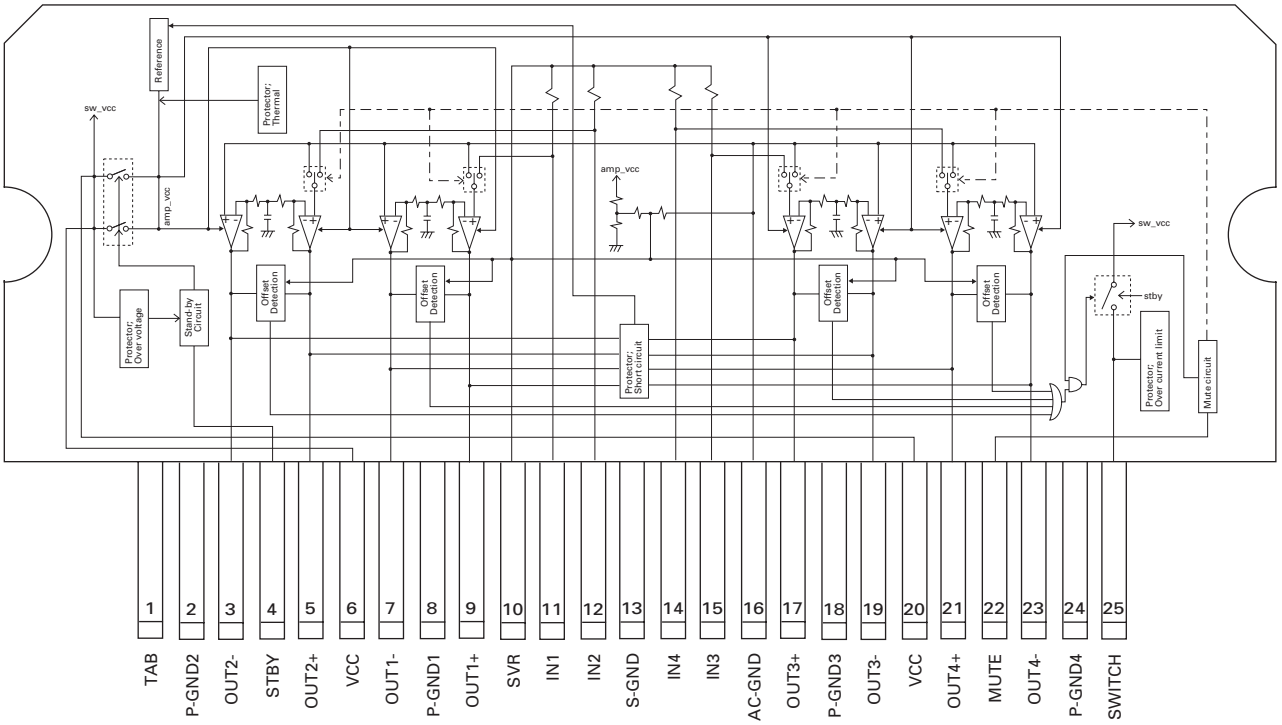

PML016B

● Block Diagram

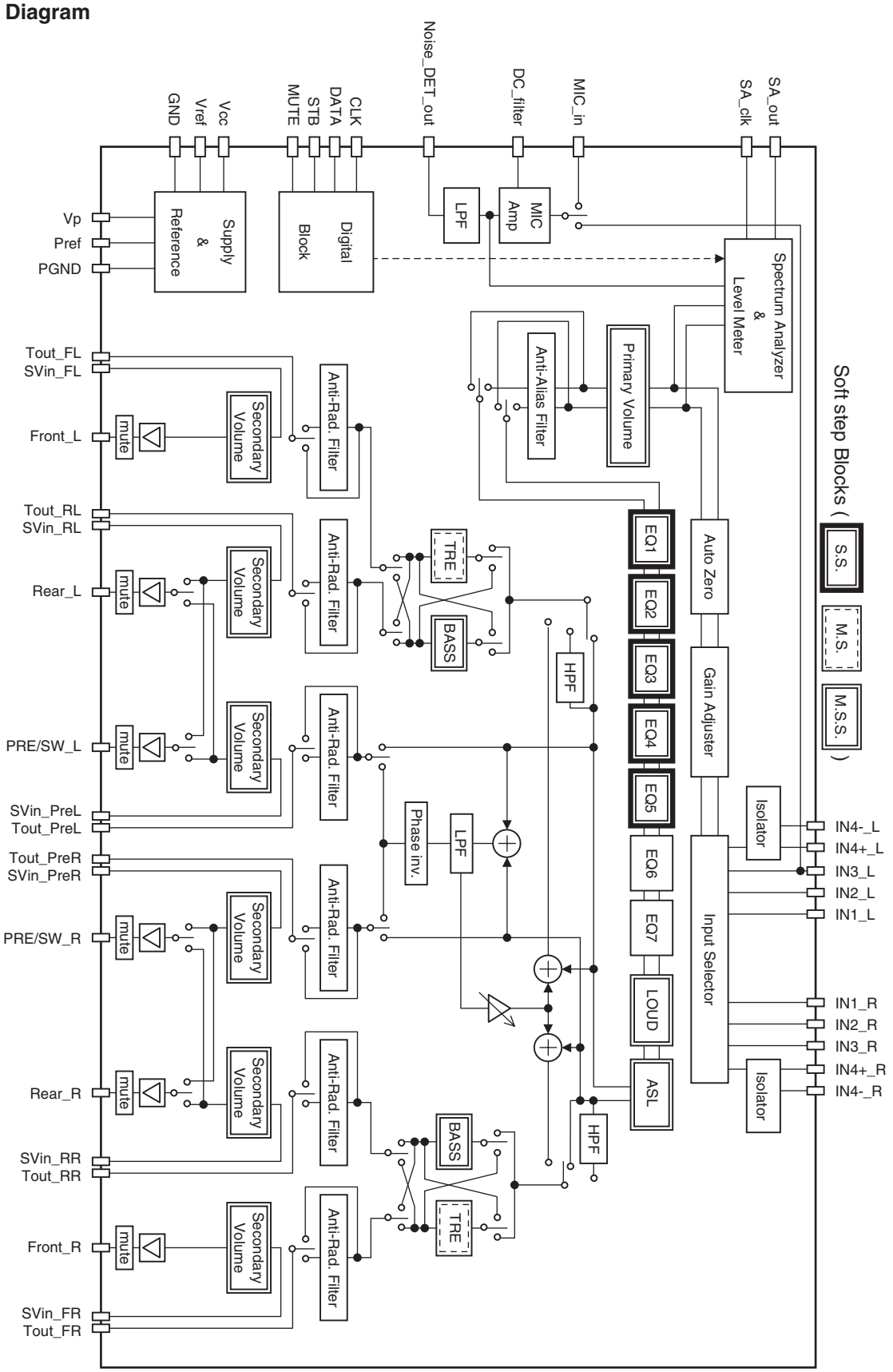

● Pin Layout

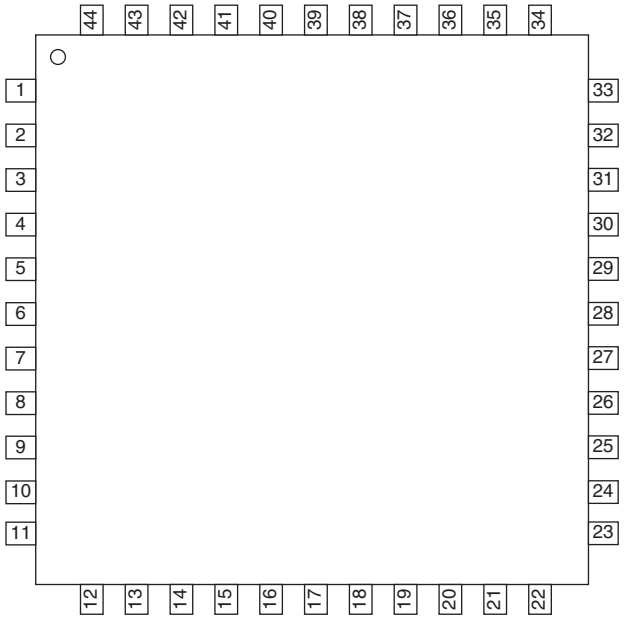

S99-50084

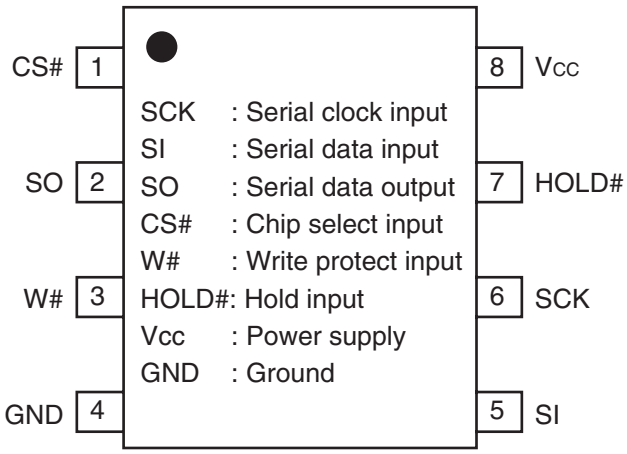

TC74VHCT08AFTS1,
TC74VHC08FTS1

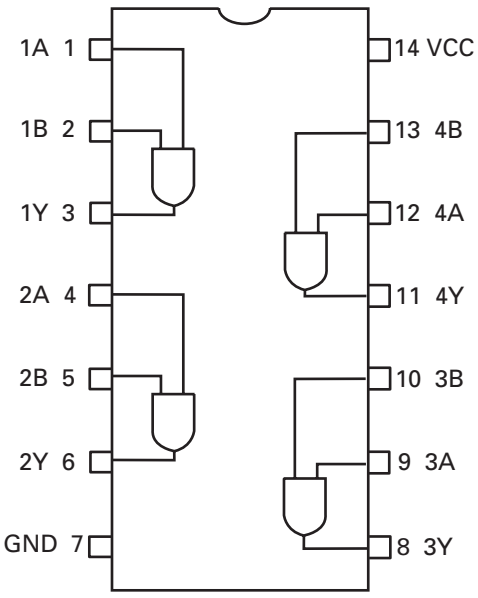

● **Pin Functions(PEG262A, PEG263A)**

Pin No.	Pin Name	I/O	Function and Operation
1	SYSPW	O	System power control output
2	KEYD	I	Key data input
3	MEMDO	O	External memory : Data output
4	MEMDI	I	External memory : Data input
5	MEMCK	O	External memory : Clock output
6	BYTE	I	External data bus width change input
7	CNVSS	I	Processor mode change input
8	TELIN	I	Mobile phone mute input
9	NC		Not used
10	$\overline{\text{RESET}}$	I	Reset input
11	XOUT	O	Clock output
12	VSS		GND
13	XIN	I	Clock input
14	VCC	I	Power supply input
15	NMI	I	NMI input
16	RCK	I	RDS : Clock input
17	LDET	I	RDS : PLL lock detect input
18	OELPW	O	OEL power supply output
19	RX2	I	IPBUS : Input 2
20,21	NC		Not used
22	PEE	O	PEE sound output
23	NC		Not used
24	$\overline{\text{BRST}}$	O	P-BUS : Reset output
25	$\overline{\text{BRXEN}}$	I/O	P-BUS : Reception enable input/output
26	PEE	O	Beep output
27	RX	I	IPBUS : Input
28	TX	O	IPBUS : Output
29	DPDT	O	GRILLE : Data output
30	KYDT	I	GRILLE : Data input
31	NC		Not used
32	$\overline{\text{BRSQ}}$	I	P-BUS : Service request input
33	BTTX	O	BT driver : Data output
34	BTRX	I	BT driver : Data input
35	NC		Not used
36	ROT0	I	Rotary encoder 0 input
37	ILMPW	O	Illumination output
38	SWVDD	O	GRILLE : Chip enable output
39	ROT1	I	Rotary encoder 1 input
40	FLPILM	O	Illumination output inside flap
41	PCL	O	Output for clock adjustment
42	MEMCS	O	External memory : Chip select output
43	MEMWP	O	External memory : Write protect output
44	EVOLSW1	O	EVOL : Source select switch 1 output
45	EVOLSW2	O	EVOL : Source select switch 2 output
46	TUNPDI	I	TUNER : PLL communication
47	TUNPDO	O	TUNER : Data output(PLL)
48	TUNPCK	O	TUNER : Clock output(PLL)
49	FLPPW	O	FLAP : Motor power supply output
50	FOPNSW	I	FLAP : Open sense swith input
51	FCLSSW	I	FLAP : Close sense swith input
52	FLPCLS	O	FLAP : Close operation output
53	FLPOPN	O	FLAP : Open operation output
54	DACCS	O	DAC : Chip select output
55	DACDT	O	DAC : Data output
56	DACCK	O	DAC : Clock output
57	EMUTE	O	EVOL : Mute output

Pin No.	Pin Name	I/O	Function and Operation
58	SACLK	O	Level indicator clock output
59	NC		Not used
60	VCC		Power supply input
61	BTCTS	I	BT driver : CTS input
62	VSS		GND
63	BTTEST	O	BT driver : RF test output
64	BTPW	O	BT driver : Power supply ON/OFF output
65	BTRST	O	BT driver : Reset output
66	BTMUTE	O	Mute output for Bluetooth sound codec
67	DALMON	O	For consumption current reduction output
68	BTRTS	O	BT driver : RTS output
69	$\overline{\text{TUNPCE2}}$	O	TUNER : Chip enable output(EEPROM)
70	TUNPCE1	O	TUNER : Chip enable output(PLL)
71	$\overline{\text{ROMCS}}$	O	ROM correction : Chip select output
72	$\overline{\text{ASENS}}$	I	ACC sense input
73	$\overline{\text{BSENS}}$	I	Back up sense input
74	ROMCK	O	ROM correction : Clock output
75	ROMDATA	I/O	ROM correction : Data input/output
76	VST	O	EVOL : Strobe output
77	VDT	O	EVOL : Data output
78	VCK	O	EVOL : Clock output
79	IPPW	O	IPBUS : Driver power supply control output
80	ASENBO	O	IPBUS : Slave ACC sense output
81	$\overline{\text{ISENS}}$	I	Illumination sense input
82	RDS 57K	I	RDS : 57kHz pulse count input
83	RDT	I	RDS : Data input
84	RDSLK	I	RDS : Lock signal input
85	MUTE	O	MUTE output
86	TESTIN	I	Test program input
87	NC		Not used
88	BATIND	I	Battery indicator input
89	KEYAD	I	Key data input
90	SAOUT	I	Level indicator input
91	$\overline{\text{DSENS}}$	I	Detach sense input
92	RST2	O	CD reset output
93	ASLIN	I	ASL input
94	AVSS		AD translation power supply input terminal
95	SL	I	TUNER : Signal level input
96	VREF		AD translation reference voltage
97	AVCC		AD translation power supply input terminal
98	BSI	I	P-BUS : Serial data input
99	BSO	O	P-BUS : Serial data output
100	BSCK	O	P-BUS : Serial clock output

PEG262A(DEH-P75BT/XN/EW5)
PEG263A(DEH-P7850BT/XN/ES)

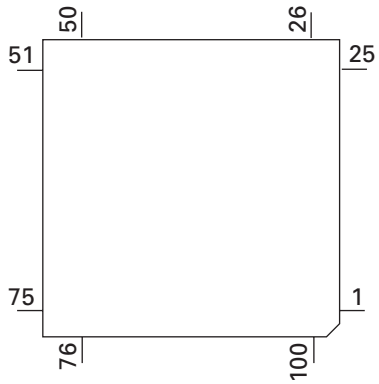

TC74VHC02FTS1

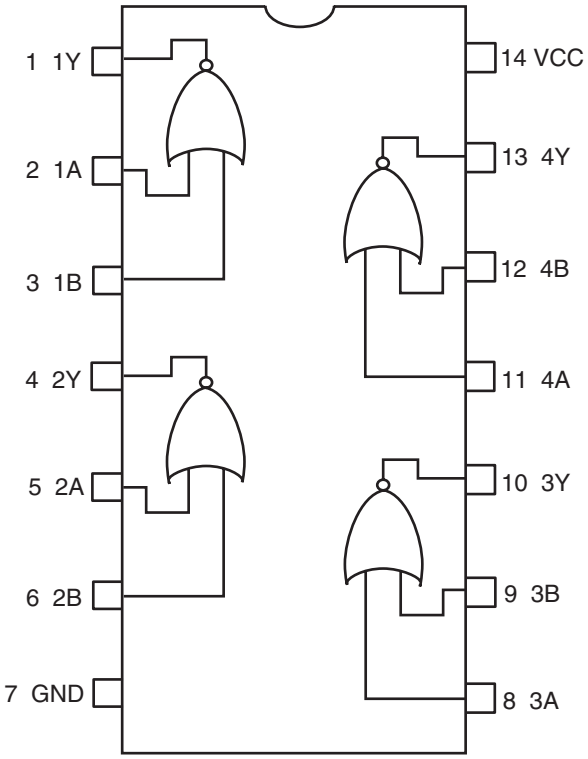

TC7PAU04FU

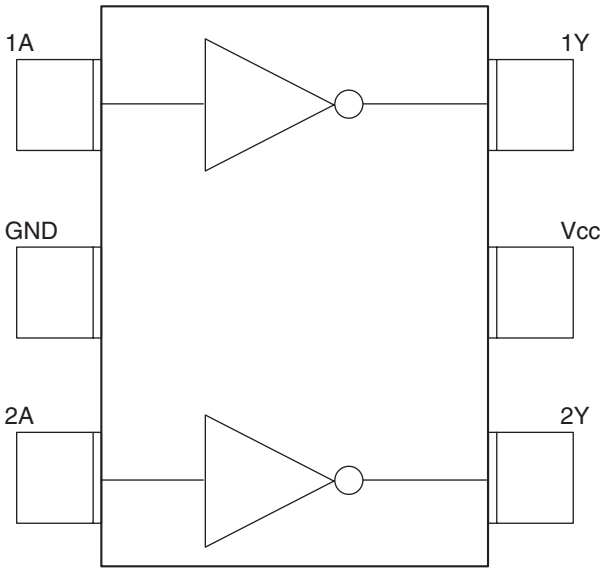

AN6123MS

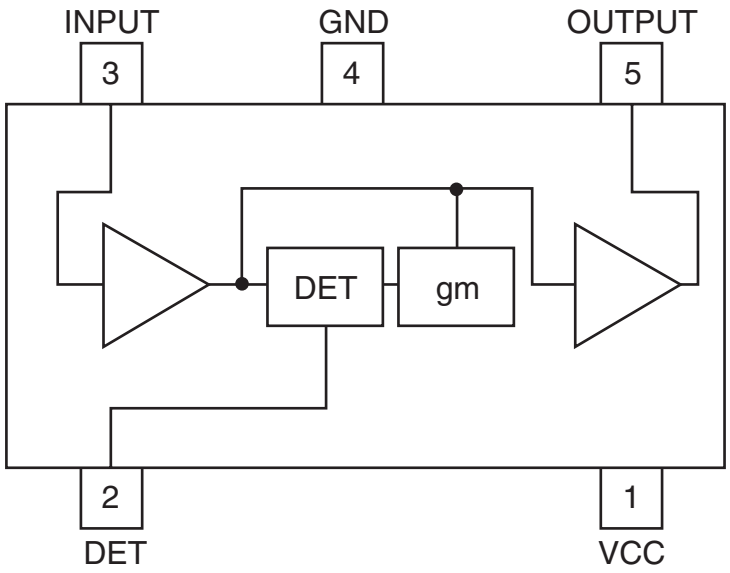

● Pin Layout

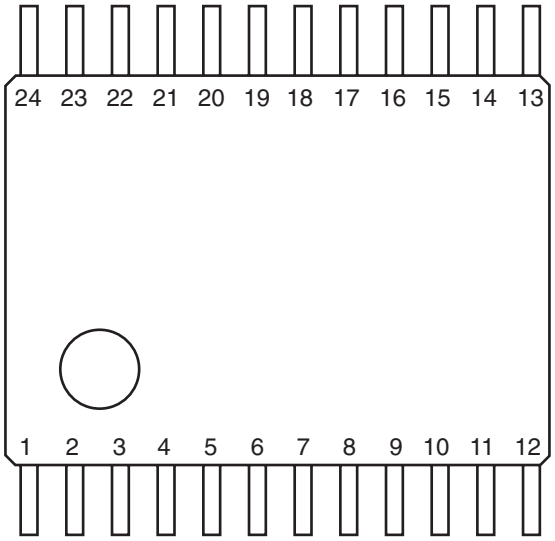

● Block Diagram

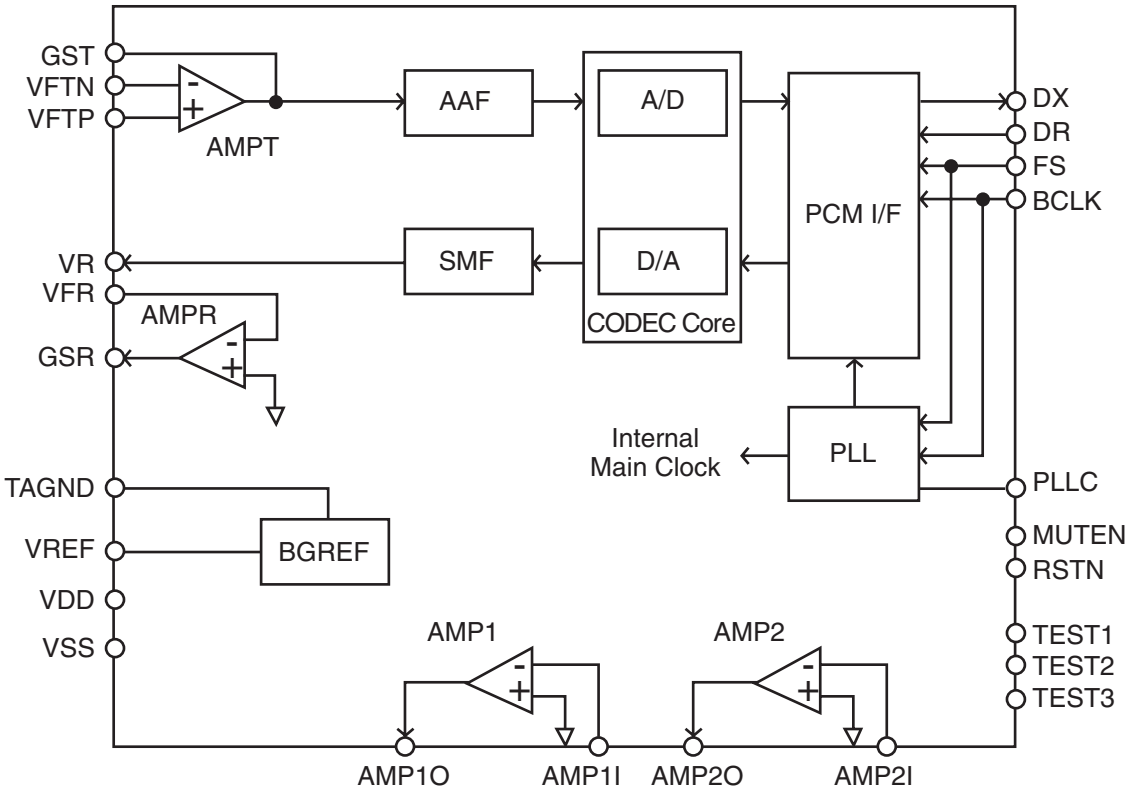

● FM/AM Tuner Unit(DEH-P75BT/XN/EW5)

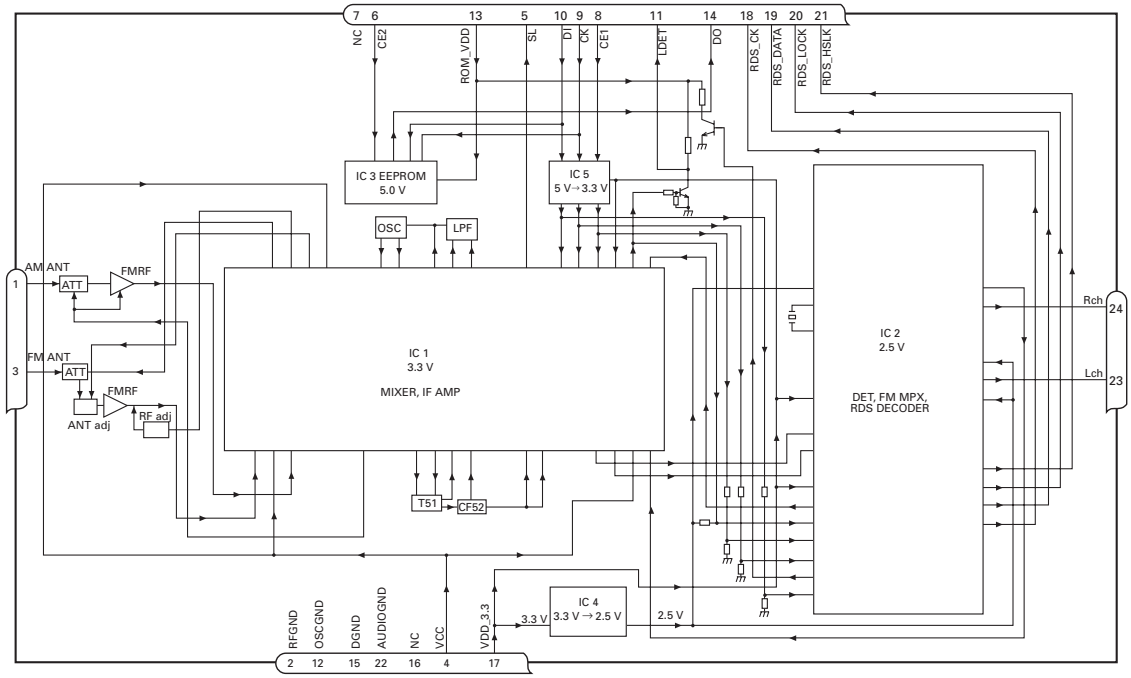

No.	Symbol	I/O	Explain	
1	AMANT	I	AM antenna input	AM antenna input high impedance AMANT pin is connected with an all antenna by way of 4.7 μH. (LAU type inductor) A series circuit including an inductor and a resistor is connected with RF ground for the countermeasure against the hum of power transmission line.
2	RFGND		RF ground	Ground of antenna block
3	FMANT	I	FM antenna input	Input of FM antenna 75 Ω Surge absorber(DSP-201M-S00B)is necessary.
4	VCC		power supply	The power supply for analog block. D.C 8.4 V ± 0.3 V
5	SL	O	signal level	Output of FM/AM signals level
6	CE2	I	chip enable-2	Chip enable for EEPROM "Low" active
7	NC		non connection	Not used
8	CE1	I	chip enable-1	Chip enable for AF•RF "High" active
9	CK	I	clock	Clock
10	DI	I	data in	Data input
11	LDET	O	lock detector	"Low" active
12	OSCGND		osc ground	Ground of oscillator block
13	ROM_VDD		power supply	Power supply for EEPROM pin 13 is connected with a power supply of micro computer.
14	DO	O	data out	Data output
15	DGND		digital ground	Ground of digital block
16	NC		non connection	Not used
17	VDD_3.3		power supply	The power supply for digital block. 3.3 V ± 0.2 V
18	RDS_CK	O	RDS clock	Output of RDS clock(2.5 V)
19	RDS_DATA	O	RDS data	Output of RDS data(2.5 V)
20	RDS_LOCK	O	RDS lock	Output unit "High" active(2.5 V) (RDS_LOCK turns over by the external transistor. "Low" active)
21	RDS_HSLK	O	RDS high speed lock	Output unit "High" active(2.5 V)(RDS_HSLK turns over by the external transistor. "Low" active)
22	AUDIOGND		audio ground	Ground of audio block
23	L ch	O	L channel output	FM stereo "L-ch" signal output or AM audio output
24	R ch	O	R channel output	FM stereo "R-ch" signal output or AM audio output

● FM/AM Tuner Unit(DEH-P7850BT/XN/ES)

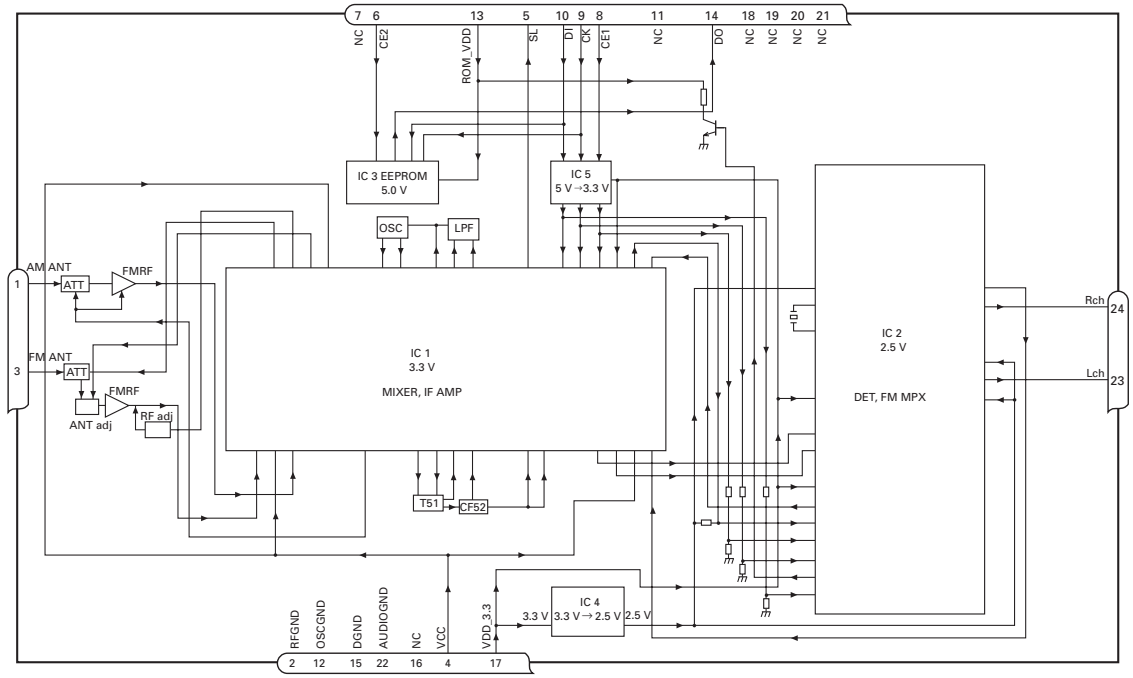

No.	Symbol	I/O	Explain	
1	AMANT	I	AM antenna input	AM antenna input high impedance AMANT pin is connected with an all antenna by way of 4.7 μH. (LAU type inductor)A series circuit including an inductor and a resistor is connected with RF ground for the countermeasure against the hum of power transmission line.
2	RFGND		RF ground	Ground of antenna block
3	FMANT	I	FM antenna input	Input of FM antenna 75 Ω Surge absorber(DSP-201M-S00B)is necessary.
4	VCC		power supply	The power supply for analog block. D.C 8.4 V± 0.3 V
5	SL	O	signal level	Output of FM/AM signals level
6	CE2	I	chip enable-2	Chip enable for EEPROM "Low" active
7	NC		non connection	Not used
8	CE1	I	chip enable-1	Chip enable for AF•RF "High" active
9	CK	I	clock	Clock
10	DI	I	data in	Data input
11	NC		non connection	Not used
12	OSCGND		osc ground	Ground of oscillator block
13	ROM_VDD		power supply	Power supply for EEPROM pin 13 is connected with a power supply of micro computer.
14	DO	O	data out	Data output
15	DGND		digital ground	Ground of digital block
16	NC		non connection	Not used
17	VDD_3.3		power supply	The power supply for digital block. 3.3 V ± 0.2 V
18	NC		non connection	Not used
19	NC		non connection	Not used
20	NC		non connection	Not used
21	NC		non connection	Not used
22	AUDIOGND		audio ground	Ground of audio block
23	L ch	O	L channel output	FM stereo "L-ch" signal output or AM audio output
24	R ch	O	R channel output	FM stereo "R-ch" signal output or AM audio output

7.3 OPERATIONAL FLOW CHART

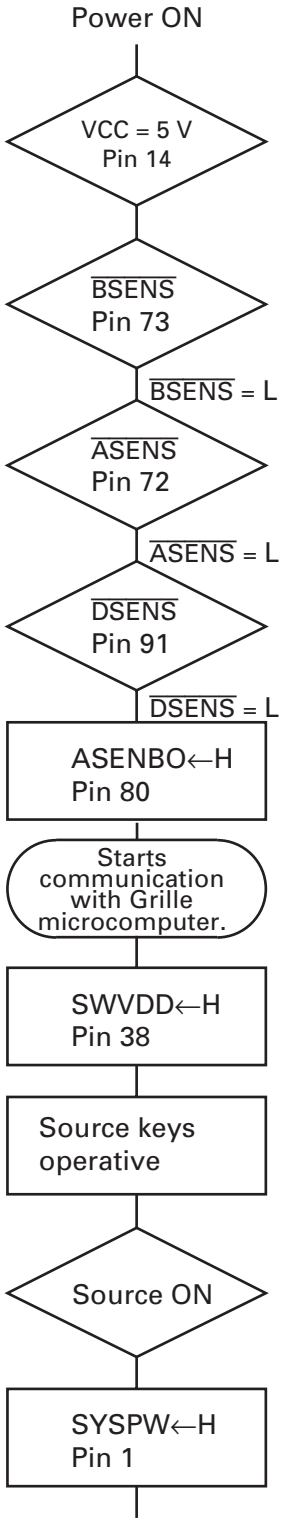

Completes power-on operation.
(After that, proceed to each source operation)

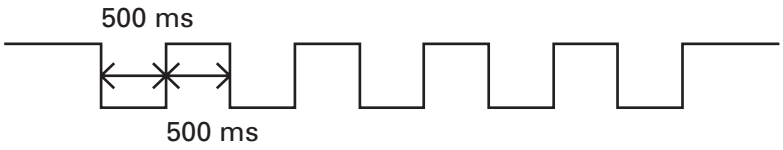

In case of the above signal, the communication with Grille microcomputer may fail.
If the time interval is not 500 msec, the oscillator may be defective.

8. OPERATIONS

● **DEH-P75BT/XN/EW5**

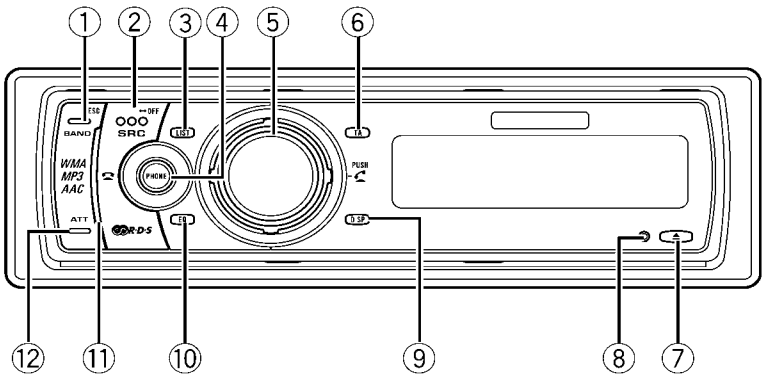

Head unit

① **BAND button**
Press to select among three FM bands and MW/LW bands and to cancel the control mode of functions.

② **SOURCE button**
This unit is turned on by selecting a source.
Press to cycle through all the available sources.

③ **LIST button**
Press to display the disc title list, track title list, folder list, file list or preset channel list depending on the source.

④ **PHONE button**
Press to select the phone as the source.
While operating a phone source, press to end a call, reject an incoming call or cancel making a call.

⑤ **MULTI-CONTROL**
Move to perform manual seek tuning, fast forward, reverse and track search controls.
Also used for controlling functions.
Turn to increase or decrease the volume.

⑥ **TA/NEWS button**
Press to turn TA function on or off. Press and hold to turn NEWS function on or off.

⑦ **EJECT button**
Press to eject a CD from your built-in CD player.
Press and hold to open or close the front panel.

⑧ **RESET button**
Press to reset the microprocessor.

⑨ **DISPLAY button**
Press to select different displays.

⑩ **EQ button**
Press to select various equalizer curves.

⑪ **Connection status indicator**
Lights up when your cellular phone is connected via Bluetooth wireless technology.

⑫ **ATT button**
Press to quickly lower the volume level, by about 90%. Press once more to return to the original volume level. ▣

● **DEH-P7850BT/XN/ES**

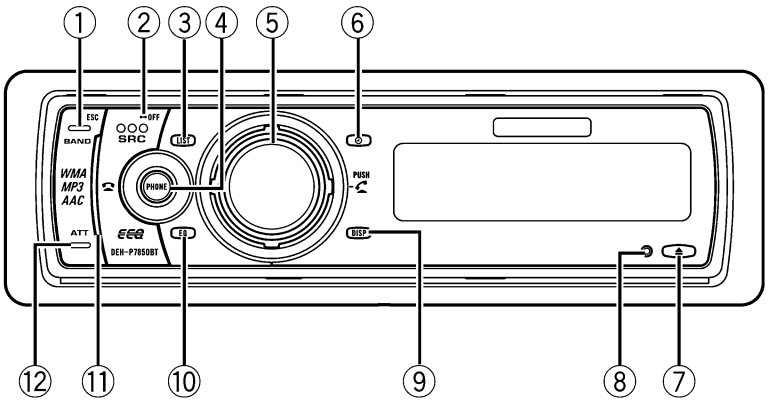

Head unit

① **BAND button**
Press to select among three FM bands and one AM band and to cancel the control mode of functions.

② **SOURCE button**
This unit is turned on by selecting a source.
Press to cycle through all the available sources.

③ **LIST button**
Press to display the disc title list, track title list, folder list, file list or preset channel list depending on the source.

④ **PHONE button**
Press to select the phone as the source.
While operating a phone source, press to end a call, reject an incoming call or cancel making a call.

⑤ **MULTI-CONTROL**
Move to perform manual seek tuning, fast forward, reverse and track search controls.
Also used for controlling functions.
Turn to increase or decrease the volume.

⑥ **CLOCK button**
Press to change to the clock display.

⑦ **EJECT button**
Press to eject a CD from your built-in CD player.
Press and hold to open or close the front panel.

⑧ **RESET button**
Press to reset the microprocessor.

⑨ **DISPLAY button**
Press to select different displays.

⑩ **EQ button**
Press to select various equalizer curves.

⑪ **Connection status indicator**
Lights up when your cellular phone is connected via Bluetooth wireless technology.

⑫ **ATT button**
Press to quickly lower the volume level, by about 90%. Press once more to return to the original volume level. ▣

Remote control

Operation is the same as when using the buttons on the head unit.

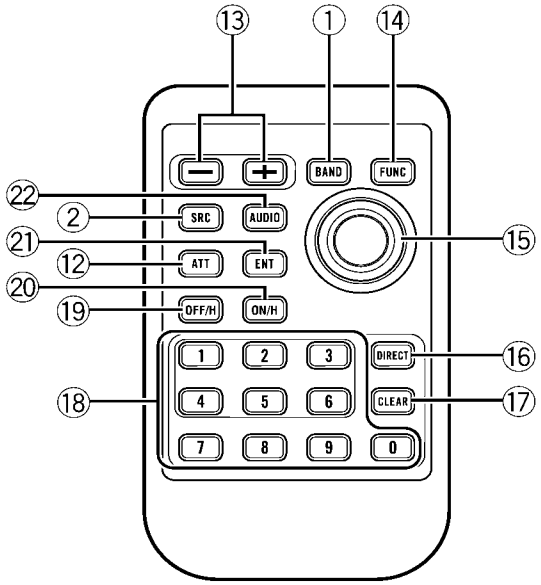

⑬ **VOLUME buttons**
Press to increase or decrease the volume.

⑭ **FUNCTION button**
Press to select functions.

⑮ **Joystick**
Move to perform manual seek tuning, fast forward, reverse and track search controls. Also used for controlling functions. Functions are the same as **MULTI-CONTROL** except for volume control.

⑯ **DIRECT button**
Press to directly select the desired track.

⑰ **CLEAR button**
Press to cancel the input number when **0-9** are used.

⑱ **0-9 buttons**
Press to directly select the desired track, preset tuning or disc. In the **Telephone** source, press to dial a phone number. Buttons **1–6** can operate the preset tuning for the tuner or disc number search for the multi-CD player.

⑲ **OFF HOOK button**
Press to start talking on the phone while operating a phone source.

⑳ **ON HOOK button**
While operating the phone source, press to end a call or reject an incoming call.

㉑ **ENTERTAINMENT button**
Press to change to the entertainment display.

㉒ **AUDIO button**
Press to select various sound quality controls. ■

Turning the unit on

● **Press SOURCE to turn the unit on.**

When you select a source, the unit is turned on.

Selecting a source

You can select a source you want to listen to. To switch to the built-in CD player, load a disc in the unit.

● **Press SOURCE to select a source.**

Press **SOURCE** repeatedly to switch between the following sources:

Tuner—Television—DVD player/Multi-DVD player—Built-in CD player—Multi-CD player—iPod—External unit 1—External unit 2—AUX1—AUX2—Telephone—BT Audio

Notes

- In the following cases, the sound source will not change:
  - — When there is no unit corresponding to the selected source connected to this unit.
  - — When there is no disc in the unit.
  - — When there is no disc in the DVD player.
  - — When there is no magazine in the multi-CD player.
  - — When there is no magazine in the multi-DVD player.
  - — When the AUX (auxiliary input) is set to off.
  - — When the **BT Audio** source is set to off.
- External unit refers to a Pioneer product (such as one available in the future) that, although incompatible as a source, enables control of basic functions by this unit. Two external units can be controlled by this unit. When two external units are connected, the allocation of them to external unit 1 or external unit 2 is automatically set by this unit.
- When this unit's blue/white lead is connected to the vehicle's auto-antenna relay control terminal, the vehicle's antenna extends when this unit's source is turned on. To retract the antenna, turn the source off.

Loading a disc

1 Press EJECT to open the front panel.

CD loading slot appears.

■ After a CD has been inserted, press **SOURCE** to select the built-in CD player.

2 Insert a CD into the CD loading slot.

Front panel is closed automatically, and playback will start.

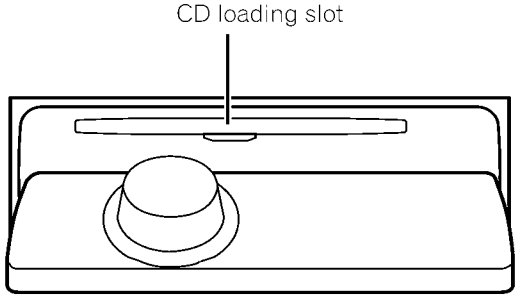

■ You can eject a CD by pressing **EJECT**.

Notes

- The built-in CD player plays one standard, 12-cm or 8-cm CD at a time. Do not use an adapter when playing 8-cm CDs.
- Do not insert anything other than a CD into the CD loading slot.
- There is sometimes a delay between starting up CD playback and the sound being issued. When being read, **Format read** is displayed.

- If you cannot insert a disc completely or if after you insert a disc the disc does not play, check that the label side of the disc is up. Press **EJECT** to eject the disc, and check the disc for damage before inserting it again.
- When the CD loading or ejecting function does not operate properly, you can eject the CD by pressing and holding **EJECT** while opening the front panel.
- If an error message such as **ERROR-11** is displayed. ▣

Adjusting the volume

● **Use MULTI-CONTROL to adjust the sound level.**

With the head unit, turn **MULTI-CONTROL** to increase or decrease the volume.
With the remote control, press **VOLUME** to increase or decrease the volume. ▣

Turning the unit off

● **Press SOURCE and hold until the unit turns off.** ▣

Connection Diagram(DEH-P75BT/XN/EW5)

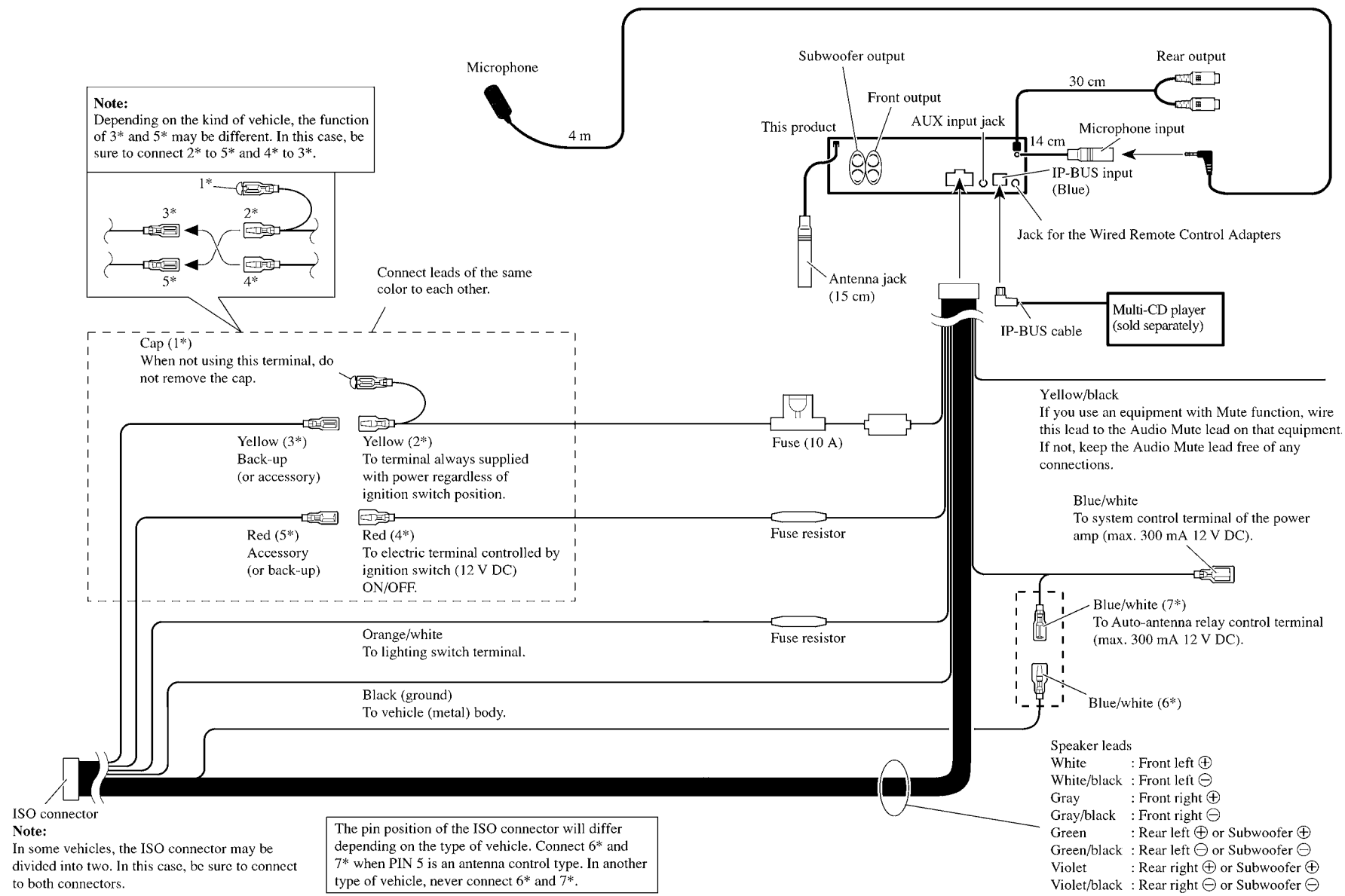

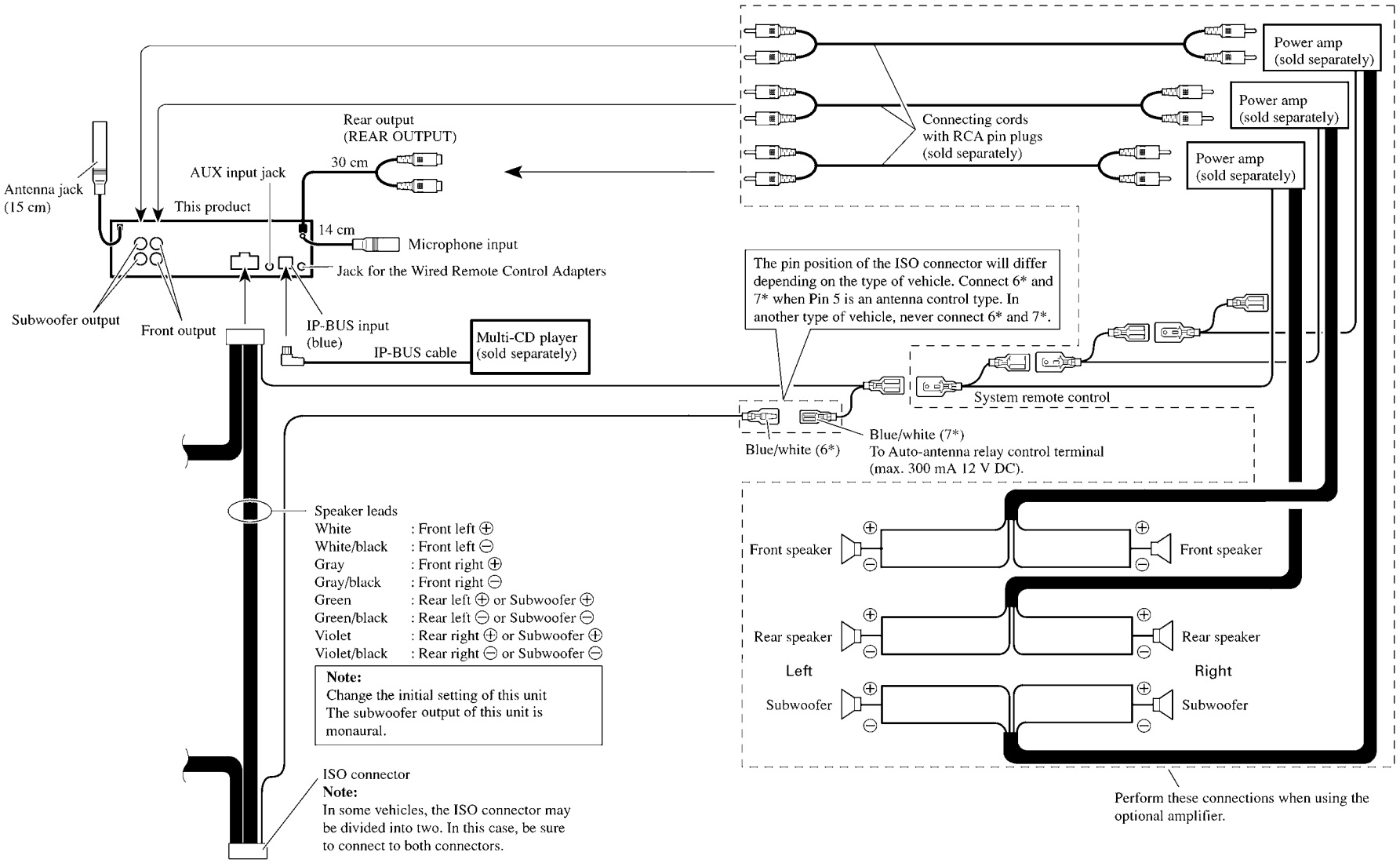
Power amp (sold separately)
Power amp (sold separately)
Power amp (sold separately)
Connecting cords with RCA pin plugs (sold separately)
Rear output (REAR OUTPUT)
30 cm
AUX input jack
Antenna jack (15 cm)
This product
14 cm
Microphone input
Jack for the Wired Remote Control Adapters
Subwoofer output
Front output
IP-BUS input (blue)
IP-BUS cable
Multi-CD player (sold separately)
The pin position of the ISO connector will differ depending on the type of vehicle. Connect 6* and 7* when Pin 5 is an antenna control type. In another type of vehicle, never connect 6* and 7*.
System remote control
Blue/white (6*)
Blue/white (7*)
To Auto-antenna relay control terminal
(max. 300 mA 12 V DC).
Speaker leads
White : Front left ⊕
White/black : Front left ⊖
Gray : Front right ⊕
Gray/black : Front right ⊖
Green : Rear left ⊕ or Subwoofer ⊕
Green/black : Rear left ⊖ or Subwoofer ⊖
Violet : Rear right ⊕ or Subwoofer ⊕
Violet/black : Rear right ⊖ or Subwoofer ⊖
Note:
Change the initial setting of this unit
The subwoofer output of this unit is monaural.
Front speaker
Front speaker
Rear speaker
Rear speaker
Left
Right
Subwoofer
Subwoofer
ISO connector
Note:
In some vehicles, the ISO connector may be divided into two. In this case, be sure to connect to both connectors.
Perform these connections when using the optional amplifier.

● Connection Diagram(DEH-P7850BT/XN/ES)

Note:
Change the initial setting of this unit
The subwoofer output of this unit is monaural.

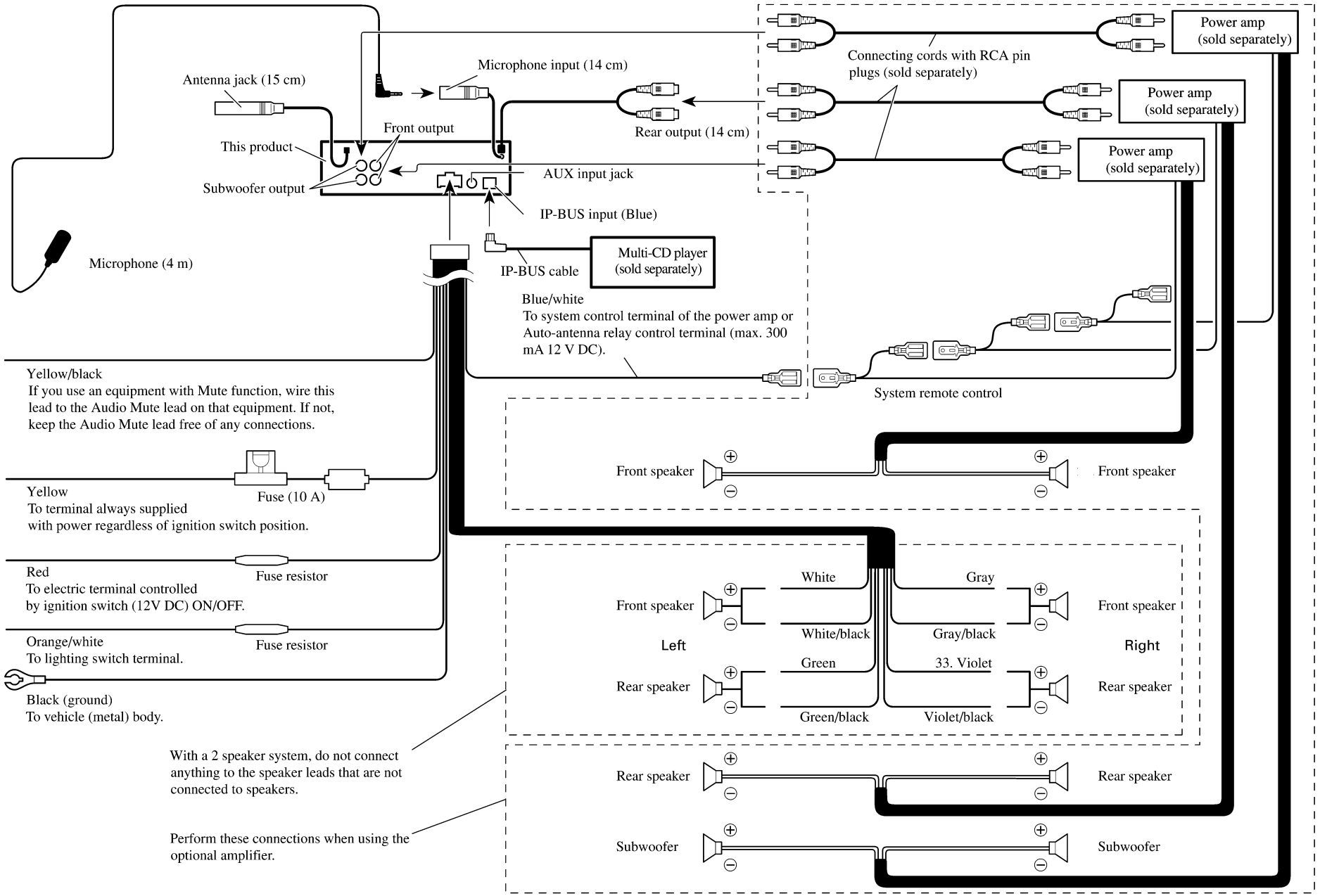
Antenna jack (15 cm)
Microphone input (14 cm)
Rear output (14 cm)
Front output
This product
Subwoofer output
AUX input jack
IP-BUS input (Blue)
Microphone (4 m)
IP-BUS cable
Multi-CD player (sold separately)
Connecting cords with RCA pin plugs (sold separately)
Power amp (sold separately)
Power amp (sold separately)
Power amp (sold separately)
Blue/white
To system control terminal of the power amp or Auto-antenna relay control terminal (max. 300 mA 12 V DC).
System remote control
Yellow/black
If you use an equipment with Mute function, wire this lead to the Audio Mute lead on that equipment. If not, keep the Audio Mute lead free of any connections.
Front speaker
Front speaker
Yellow
To terminal always supplied with power regardless of ignition switch position.
Fuse (10 A)
Red
To electric terminal controlled by ignition switch (12V DC) ON/OFF.
Fuse resistor
Orange/white
To lighting switch terminal.
Fuse resistor
Black (ground)
To vehicle (metal) body.
White
Gray
Front speaker
Front speaker
White/black
Gray/black
Left
Right
Green
33. Violet
Rear speaker
Rear speaker
Green/black
Violet/black
With a 2 speaker system, do not connect anything to the speaker leads that are not connected to speakers.
Rear speaker
Rear speaker
Perform these connections when using the optional amplifier.
Subwoofer
Subwoofer

A

B

C

D

E

F

● Jigs List

Name	Jig No.	Remarks
Test Disc	TCD-782	Checking the grating
L.P.F.		Checking the grating (Two pieces)
	GGF1539	Removing the cord assy(BT antenna cable)

● Grease List

Name	Jig No.	Remarks
Grease	GEM1024	CD Mechanism Module
Grease	GEM1045	CD Mechanism Module

Before shipping out the product, be sure to clean the following portions by using the prescribed cleaning tools:

Portions to be cleaned	Cleaning tools
CD pickup lenses	Cleaning liquid : GEM1004 Cleaning paper : GED-008

Portions to be cleaned	Cleaning tools
Fans	Cleaning paper : GED-008